MTECH

Power Transducers

Table of Contents

Model	Page
AC Current Transducers	4
AC Voltage Transducers	7
AC Power Transducers	10
Watt (Active Power)	
VAR (Reactive Power)	
Q (Reactive Power)	
VA (Apparent Power)	
AC Energy Transducers	13
Watt/VAR/Q-Hour (Consumed Energy)	
Power Factor/Phase Angle Transducers	16
Frequency Transducers	18
RTD/Slidewire Transducers	19
DC Voltage Transducers/Ground Fault Detectors	20
Line Post Sensor Transducers/Fault Alarms	21
Line Post Sensor Transducer System	23
Portable Transducer Calibrator	25
Dimensions	27
Connection Diagrams	29

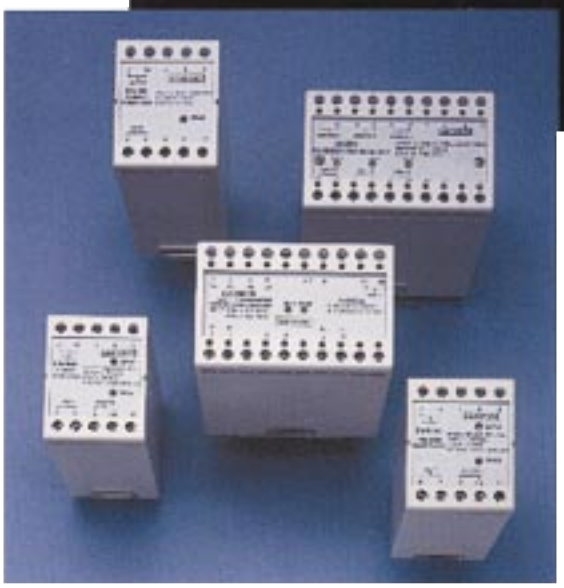

Before you can control electricity, you have to measure it.

Whether you are a utility generating and distributing electricity, or an industrial plant or commercial facility trying to manage and conserve it, optimization of your processes depends heavily on accurate power measurement. Measurement Technologies (mTech) has high quality transducers, covering virtually every electrical variable, and virtually any I/O combination.

Our products are in daily use by hundreds of utilities, industrial plants, and commercial customers from all over the world. We strive to meet the needs of the market with more models and more features per model. We offer DIN cases for high-density mounting, as well as the traditional, surface-mounting, metal enclosures. All our units are built to the highest quality standards and perform with exceptional accuracy and reliability.

We offer a range of models within each of the following categories: AC current; AC voltage; watts; VAR; Q; VA; watt/VAR/Q-Hour; frequency; power factor; RTD/slidewire; DC voltage/ground fault detection; and line post sensing. We even have a portable system for testing transducers.

No one is better equipped to help you measure electricity.

THERE'S AN mTech POWER TRANSDUCER FOR EVERY REQUIREMENT

Utilities		Watts	VARs	Current	Voltage	Frequency	Phase Angle	Ground Faults	Trans-former Temp.	Ambient Temp.	Watt/ Watt-hour	VAR/ VAR-hour	Billing Allocation	DC Voltage
Generating Station	Per generator	●	●	●	●	●	●							
	General Use							●	●	●				●
Transmission Station	Incoming Line	●	●	●	●									
	Outgoing Line	●	●	●	●									
	General							●	●	●				●
Transformer Station	Incoming Line				●									
	Station Buss			●	●						●	●		
	Feeder	●	●	●										
	General							●	●	●				●
Distribution Station	Incoming Line				●									
	Station Buss	●	●	●	●									
	Feeder			●										
	General							●	●	●				●
PROCESS USERS	Motors	●	●	●	●		●							
	Energy Management										●	●	●	
	Uninterruptible Power Systems	●	●	●	●	●	●							●

AC Current Transducers

Current: The electric charge passing through a circuit per unit of time. Engineering unit is the Ampere. Measured in series with a source or load. Can be inductively monitored with a current transformer.

Standard Features

- True RMS or average-sensing models
- 0.25% of full scale accuracy
- 0.01%/°C temperature coefficient
- 0.2%/year long-term stability
- 2.5 kV transient immunity
- 5 kV impulse test
- 2 kV dielectric testing
- Current and voltage outputs
- ABS DIN rail mount or metal surface mount cases

Specifications

Accuracy (20°C to 25°C): 0.25% of rated full scale output from 5% to 110% of rated input range

Operating Temperature: -20°C to +70°C

Operating Humidity: 0 to 95% non-condensing

Temperature Coefficient: 0.01%/°C

Long Term Drift: less than 0.2% of rated output per year

Output Ripple (Peak): 0.5% maximum

Power Factor Range: any

Dielectric Test Input/Output/Power/Case: 2,000 Vrms for 1 minute

Response Time

To 90%: 200 ms maximum

To 99%: 400 ms maximum

Surge Withstand: ANSI C37.90a (IEEE 472); BEAMA 219; Special 5 kV (metal case only)

Calibration Range Full scale: ±10% minimum; ±2% minimum (if applicable)

Operating Frequency: 60 Hz (unless otherwise specified)

UL Approved Models: A100, A300, A104E, A304E, DA100, DA300, DA104E, DE304E

			Overload Without Damage			
Option	**Input**	**Overrange with Acc.**	**Cont.**	**10 s/h**	**1 s/h**	**Burden**
0	0-5 A	7.5 A	15 A	30 A	250 A	Maximum input burden
1	0-1 A	1.5 A	3 A	6 A	100 A	is 4 VA at full scale
2	0-2 A	3.0 A	6 A	12 A	150 A	regardless of option.
3	0-10 A	15 A	30 A	50 A	300 A	Burden may be as low
4*	0-25 A	35 A	35 A	75 A	300 A	as 0.1 VA. Consult factory if critical.

*Metal case models only

Available Models – AC Current Transducers

A/DA Series

Average Sensing, Zero-Based Input
An economical and accurate means of current measurement on systems where the waveform is a pure sine wave. Can also be used for non-critical applications with distorted waveforms, where high accuracy is not required. Calibrated to the RMS (root mean square) value of the sine wave. Available in single or triple versions, self-powered or externally powered. 4-20 mA and 1-5 V output versions must have auxiliary power.

To Order, Specify:

A. ENCLOSURE

Extruded Aluminum Metal, Surface Mount	A
ABS DIN, Rail Mount	DA

B. CONFIGURATION

Single	1
Triple	3

C. INPUT

0-5 A	0
0-1 A	1
0-2 A	2
0-10 A	3
0-25 A①	4
Special	X

① Metal case models only.

D. OUTPUT

0-1 mA (0-10,000 Ohms)	0
0-3 mA (0-3,300 Ohms)	1
0-5 mA (0-2,000 Ohms)	2
0-10 mA (0-1,000 Ohms)	3
4-20 mA (0-750 Ohms)②	4
0-100 mV (2,000 Ohms min.)	5
0-1 V (2,000 Ohms min.)	6
0-5 V (2,000 Ohms min.)	7
0-10 V (2,000 Ohms min.)	8
1-5 V (2,000 Ohms min.)②	9
Special	X

E. SUFFIX (If Applicable)

25 to 125% Calibration	A
50 Hz	C
400 Hz	D
120 VAC Aux Power	E
230 VAC Aux Power	F
Case Ground Terminal①	G
DC Aux Power (Please Specify)	K
Special	X

① Metal case models only.
② Auxiliary power supply required.

EXAMPLE: DA-3-2-4-E is the ordering code for an Average-Sensing Current Transducer in a DIN rail mount case, a triple version, with a 0-2 A input, a 4-20 mA output, and 120 VAC auxiliary power.

RA/DRA Series

True RMS Sensing, Zero-Based Input
Recommended where harmonics are present in the system. Uses new low voltage integrated circuit technology that computes the RMS value of the input waveform, regardless of shape, from the fundamental to the 50th harmonic. Self-powered or externally-powered. Readings down to virtually zero can be achieved with auxiliary-powered models. 4-20 mA output versions must have auxiliary power.

To Order, Specify:

A. ENCLOSURE

Extruded Aluminum Metal, Surface Mount	RA
ABS DIN, Rail Mount	DRA

B. CONFIGURATION

Single	1

C. INPUT

0-5 A	0
0-1 A	1
Special	X

D. OUTPUT

0-1 mA (0-10,000 Ohms)	0
4-20 mA (0-750 Ohms) Aux Power Only	4
Special	X

E. SUFFIX (If Applicable)

25 to 125% Calibration	A
50 Hz	C
400 Hz	D
120 VAC Aux Power	E
230 VAC Aux Power	F
Case Ground Terminal①	G
DC Aux Power (Please Specify)	K
Special	X

① Metal case models only.

EXAMPLE: RA-1-0-4-F is the ordering code for an RMS-Sensing Current Transducer in a metal surface mount case, a single version, with a 0-5 A input, a 4-20 mA output, and 230 VAC auxiliary power.

SA/DSA Series

Three-Phase Summation Transducers
Average sensing devices calibrated to the RMS value of the sine wave. Available in three phase versions only, they provide an output that is the arithmetic sum of the inputs. Self-powered or externally-powered. 4-20 mA and 1-5 V output versions must have auxiliary power.

To Order, Specify:

A. ENCLOSURE

Extruded Aluminum Metal, Surface Mount	SA
ABS DIN, Rail Mount	DSA

B. CONFIGURATION

Triple	3

C. INPUT

0-5 A	0
0-1 A	1
Special	X

D. OUTPUT

0-1 mA (0-10,000 Ohms)	0
0-3 mA (0-3,300 Ohms)	1
0-5 mA (0-2,000 Ohms)	2
0-10 mA (0-1,000 Ohms)	3
4-20 mA (0-750 Ohms)②	4
0-100 mV (2,000 Ohms min.)	5
0-1 V (2,000 Ohms min.)	6
0-5 V (2,000 Ohms min.)	7
0-10 V (2,000 Ohms min.)	8
1-5 V (2,000 Ohms min.)②	9
Special	X

E. SUFFIX (If Applicable)

25 to 125% Calibration	A
50 Hz	C
400 Hz	D
120 VAC Aux Power	E
230 VAC Aux Power	F
Case Ground Terminal①	G
DC Aux Power (Please Specify)	K
Special	X

① Metal case models only.
② Auxiliary power supply required.

EXAMPLE: DSA-3-1-2-A is the ordering code for a Three-Phase Summation Current Transducer in a DIN rail mount case, triple-phase, with a 0-1 A input, a 0-5 mA output, and 25 to 125% calibration.

BA/DBA Series

Single-Phase, Average Sensing, Bi-Directional
Average sensing, zero-based input transducers that are bi-directional and calibrated to the RMS value of the sine wave. Single-phase versions only, they must be powered from a potential source on the power line being measured. Output is proportional to the input magnitude, with polarity set by the direction of current flow. 4-20 mA and 1-5 V versions use 12 mA and 3 V as the zero current reference.

To Order, Specify:

A. ENCLOSURE

Extruded Aluminum Metal, Surface Mount	BA
ABS DIN, Rail Mount	DBA

B. CONFIGURATION

Single	1

C. INPUT

0-5 A	0
0-1 A	1
Special	X

D. POTENTIAL

120 VAC	0
Special	X

E. OUTPUT

0 ± 1 mA (0-10,000 Ohms)	0
0 ± 3 mA (0-3,300 Ohms)	1
0 ± 5 mA (0-2,000 Ohms)	2
0 ± 10 mA (0-1,000 Ohms)	3
4-20 mA (0-750 Ohms)	4
0 ± 100 mV (2,000 Ohms min.)	5
0 ± 1 V (2,000 Ohms min.)	6
0 ± 5 V (1,000 Ohms min.)	7
0 ± 10 V (2,000 Ohms min.)	8
1-5 V (1,000 Ohms min.)	9

F. SUFFIX (If Applicable)

25 to 125% Calibration	A
50 Hz	C
400 Hz	D
120 VAC Aux Power	E
230 VAC Aux Power	F
Case Ground Terminal①	G
DC Aux Power (Please Specify)	K
Special	X

① Metal case models only.

EXAMPLE: BA-1-0-1-3-E is the ordering code for a Single-Phase Average Sensing, Bi-Directional Current Transducer in a metal surface mount case, a single version, with a 0-5 A input, 120 VAC potential input, a 0 ± 10 mA output, and 120 VAC auxiliary power.

TA/DTA Series

Single-Phase, Average Sensing, Two-Wire Loop Powered
Average sensing, zero-based input transducers that are calibrated to the RMS value of the sine wave. Single-phase versions only. Two-wire loop powered. 4-20 mA output only.

To Order, Specify:

A. ENCLOSURE

Extruded Aluminum Metal, Surface Mount	TA
ABS DIN, Rail Mount	DTA

B. CONFIGURATION

Single	1

C. INPUT

0-5 A	0
0-1 A	1
Special	X

D. OUTPUT

4-20 mA (Load limited by loop voltage, 18-30 VDC)	4

E. SUFFIX (If Applicable)

50 Hz	C
400 Hz	D
Case Ground Terminal①	G
Special	X

① Metal case models only.

EXAMPLE: TA-1-1-4-G is the ordering code for a Two-Wire Loop Powered Single-Phase, Average Sensing Transducer in a metal surface mount case, single-phase with a 0-1 A input, a 4-20 mA output, and a case ground terminal.

See page 29 for connections.

AC Voltage Transducers

Voltage: The most basic AC measurement. The magnitude of the waveform measured across a source or load. RMS is the most commonly used voltage value.

Standard Features

- True RMS or average-sensing models
- 0.25% of full scale accuracy
- 0.01%/°C temperature coefficient
- 0.2%/year long-term stability
- 2.5 kV or 5 kV transient immunity
- 5 kV impulse test
- 2 kV dielectric testing
- Current and voltage outputs
- ABS DIN rail mount or metal surface mount cases

Specifications

Accuracy (20°C to 25°C): 0.25% of rated full scale output from 10% to 110% of rated input range (some models work to zero)

Operating Temperature: -20°C to +70°C

Operating Humidity: 0 to 95% non-condensing

Temperature Coefficient: 0.01%/°C maximum

Long Term Drift: less than 0.2% of rated output per year

Output Ripple (Peak): 0.5% maximum

Power Factor Range: any

Dielectric Test Input/Output/Power/Case: 2000 Vrms for 1 minute

Response Time

To 90%: 200 ms maximum

To 99%: 400 ms maximum

Surge Withstand: ANSI C37.90a (IEEE 472); BEAMA 219; Special 5 kV (metal case only)

Calibration Range Full scale: ±10%; ±2% (if applicable)

Operating Frequency: 60 Hz (unless otherwise specified)

UL Approved Models: V100, V300, V104E, V304E, DV100, DV300, DV104E, DV304E

Option	Input Nom.	Input F.S.	Max. Input with Acc.	Max. Input Cont.	Max. Input 10 s	Burden
0	120 V	150 V	180 V	200 V	250 V	Maximum input burden
1	69 V	90 V	110 V	120 V	150 V	is 4 VA at full scale
2	240 V	300 V	360 V	400 V	600 V	regardless of option.
3	480 V	600 V	650 V	700 V	900 V	Burden may be as low
4 to 9			Per Option 0 or 2 as applicable			as 0.1 VA. Consult factory if critical.

Available Models– AC Voltage Transducers

V/DV Series

Average Sensing, Zero-Based Input
An economical and accurate means of voltage measurement on systems where the waveform is a pure sine wave. Can also be used for non-critical applications with distorted waveforms, where high accuracy is not required. Calibrated to the RMS (root mean square) value of the sine wave. Available in single or triple versions, self-powered or externally powered. 4-20 mA and 1-5 V output versions must have auxiliary power.

To Order, Specify:

A.	**ENCLOSURE**	
	Extruded Aluminum Metal, Surface Mount	V
	ABS DIN, Rail Mount	DV
B.	**CONFIGURATION**	
	Single	1
	Triple	3
C.	**INPUT**	
	0-150 V	0
	0-90 V	1
	0-300 V	2
	0-600 V	3
	Special	X
D.	**OUTPUT**	
	0-1 mA (0-10,000 Ohms)	0
	0-3 mA (0-3,000 Ohms)	1
	0-5 mA (0-2,000 Ohms)	2
	0-10 mA (0-1,000 Ohms)	3
	4-20 mA (0-750 Ohms)②	4
	0-100 mV (2,000 Ohms min.)	5
	0-1 V (2,000 Ohms min.)	6
	0-5 V (2,000 Ohms min.)	7
	0-10 V (2,000 Ohms min.)	8
	1-5 V (2,000 Ohms min.)②	9
	Special	X
E.	**SUFFIX (If Applicable)**	
	25 to 125% Calibration	A
	50 Hz	C
	400 Hz	D
	120 VAC Aux Power	E
	230 VAC Aux Power	F
	Case Ground Terminal①	G
	DC Aux Power (Please Specify)	K
	Special	X

① Metal case models only.
② Auxiliary power supply required.

EXAMPLE: DV-3-2-4-E is the ordering code for an Average-Sensing Voltage Transducer in a DIN rail mount case, a triple version, with a 0-300 V input, a 4-20 mA output, and 120 VAC auxiliary power.

RV/DRV Series

True RMS Sensing, Zero-Based Input
Recommended where harmonics are present in the system. Uses new low voltage integrated circuit technology that computes the RMS value of the input waveform, regardless of shape, from the fundamental to the 50th harmonic. Self-powered or externally-powered. Readings down to virtually zero can be achieved with auxiliary-powered models. 4-20 mA version must have auxiliary power.

To Order, Specify:

A.	**ENCLOSURE**	
	Extruded Aluminum Metal, Surface Mount	RV
	ABS DIN, Rail Mount	DRV
B.	**CONFIGURATION**	
	Single	1
C.	**INPUT**	
	0-150 V	0
	Special	X
D.	**OUTPUT**	
	0-1 mA (0-10,000 Ohms)	0
	4-20 mA (0-750 Ohms) Aux. Power Only	4
	Special	X
E.	**SUFFIX (If Applicable)**	
	25 to 125% Calibration	A
	50 Hz	C
	400 Hz	D
	120 VAC Aux Power	E
	230 VAC Aux Power	F
	Case Ground Terminal①	G
	DC Aux Power (Please Specify)	K
	Special	X

① Metal case models only.

EXAMPLE: RV-1-0-4-F is the ordering code for an RMS-Sensing Voltage Transducer in a metal surface mount case, single-phase, with a 0-150 V input, a 4-20 mA output, and 230 VAC auxiliary power.

VX/DVX Series

Single-Phase, Average Sensing, Suppressed Zero-Based Input
Average sensing devices calibrated to the RMS value of the sine wave. Available in single-phase versions only. Self-powered or externally-powered. 4-20 mA and 1-5 V output versions must have auxiliary power.

To Order, Specify:

A.	**ENCLOSURE**	
	Extruded Aluminum Metal, Surface Mount	VX
	ABS DIN, Rail Mount	DVX
B.	**CONFIGURATION**	
	Single	1
C.	**INPUT**	
	90-150 V	4
	100-140 V	5
	110-130 V	6
	180-300 V	7
	200-280 V	8
	220-260 V	9
	Special	X

D. OUTPUT

0-1 mA (0-10,000 Ohms)	0
0-3 mA (0-3,300 Ohms)	1
0-5 mA (0-2,000 Ohms)	2
0-10 mA (0-1,000 Ohms)	3
4-20 mA (0-750 Ohms)②	4
0-100 mV (2,000 Ohms min.)	5
0-1 V (2,000 Ohms min.)	6
0-5 V (2,000 Ohms min.)	7
0-10 V (2,000 Ohms min.)	8
1-5 V (2,000 Ohms min.)②	9

E. SUFFIX (If Applicable)

25 to 125% Calibration	A
50 Hz	C
400 Hz	D
120 VAC Aux Power	E
230 VAC Aux Power	F
Case Ground Terminal①	G
DC Aux Power (Please Specify)	K
Special	X

① Metal case models only.
② Auxiliary power supply required.

EXAMPLE: DVX-1-4-2-A is the ordering code for a Single-Phase, Average Sensing Voltage Transducer in a DIN rail mount case, single-phase, with a 90-150 V input, a 0-5 mA output, and 25 to 125% calibration.

RVX/DRVX Series

Single-Phase, True RMS Sensing, Suppressed Zero-Based Input
RMS sensing, suppressed zero-based input devices. Available in single-phase versions only. Self-powered or externally-powered. 4-20 mA version must have auxiliary power.

To Order, Specify:

A. ENCLOSURE

Extruded Aluminum Metal, Surface Mount	RVX
ABS DIN, Rail Mount	DRVX

B. CONFIGURATION

Single	1

C. INPUT

90-150 V	4
100-140 V	5
110-130 V	6
180-300 V	7
200-280 V	8
220-260 V	9
Special	X

D. OUTPUT

0-1 mA (0-10,000 Ohms)	0
4-20 mA (0-750 Ohms)②	4
Special	X

E. SUFFIX (If Applicable)

25 to 125% Calibration	A
50 Hz	C
400 Hz	D
120 VAC Aux Power	E
230 VAC Aux Power	F
Case Ground Terminal①	G
DC Aux Power (Please Specify)	K
Special	X

① Metal case models only.
② Auxiliary power supply required.

EXAMPLE: RVX-1-9-0-C is the ordering code for a Single-Phase, True RMS Sensing, Suppressed Zero-Based Input, Voltage Transducer in a metal surface mount case, single-phase, with a 220-260 V input, a 0-1 mA output, and 50 Hz.

TV/DTV Series

Single-Phase, Average Sensing, Two-Wire Loop Powered
Average sensing, zero-based input transducers that are calibrated to the RMS value of the sine wave. Single-phase versions only. Two-wire loop powered. 4-20 mA output only.

To Order, Specify:

A. ENCLOSURE

Extruded Aluminum Metal, Surface Mount	TV
ABS DIN, Rail Mount	DTV

B. CONFIGURATION

Single	1

C. INPUT

0-150 V	0
Special	X

D. OUTPUT

4-20 mA (Load limited by loop voltage, 18-30 VDC)	4

E. SUFFIX (If Applicable)

50 Hz	C
400 Hz	D
Case Ground Terminal①	G
Special	X

① Metal case models only.

EXAMPLE: TV-1-0-4-G is the ordering code for a Two-Wire Loop Powered Single-Phase, Average Sensing Transducer in a metal surface mount case, single-phase, with a 0-150 V input, a 4-20 mA output, and a case ground terminal.

See page 30 for connections.

AC Power Transducers

Watts • VAR • Q • VA • WR • WQ

Watts: A measure of power or work being done. In an AC circuit, current multiplied by voltage multiplied by the cosine of the phase angle between current and voltage. Differing loads cause current to lag or lead voltage by some angle in degrees, which causes the power consumed (watts) to be less than the product of the voltage times current.

VAR: Current and voltage that does no work. A Volt-Ampere Reactance is essentially the opposite of a watt. VAR is the product of voltage multiplied by current in opposite quadrants. They increase as the phase angle increases and can be either leading (to the high side of the center zero based output) or lagging (to the low side of zero).

Q: A measure of reactive power. Permits calculation of VAR-hours to be recorded with one counter in a positive direction between 0.866 leading and zero lagging, which is within the typical power factor range of electrical equipment.

VA: Voltage times current. Also known as "apparent power."

Standard Features:

- 0.2% of reading accuracy
- <0.005%/°C temperature coefficient
- Low burden
- Transient protected
- Voltage, current, and process outputs
- Electronic multipliers — over 200 real time multiplications of Volts times Amps per cycle for accurate conversions of even the most distorted waveforms
- Exceptional long-term stability
- 1, 1-1/2, 2, 2-1/2, and 3 element versions
- Self-powered or externally powered
- ABS DIN rail or metal surface mount cases
- Isolated outputs on combined transducers

Specifications

Accuracy (@ 25°C ±2°C)

Watt: $\frac{0.19\% \text{ of reading}}{\text{Cos}\Theta}$ ±0.01% of full scale

VAR: $\frac{0.19\% \text{ of reading}}{\text{Sin}\Theta}$ ±0.01% of full scale

Q: $\frac{0.19\% \text{ of reading}}{\text{Cos}(\Theta\text{-}60°)}$ ±0.01% of full scale

VA: 0.19% of reading ±0.01% of full scale

Long Term Drift: <0.2%/year non-cumulative

Temperature Range
Operating: -20°C to +70°C
Storage: -40°C to +75°C

Temperature Coefficient: ≤0.005%/°C

Operating Humidity: 0-95% non-condensing

Output Ripple Peak: ≤0.5% peak

Power Factor Range: Watt or VAR, any; Q, 0.866 lead to 0 lag

Operating Frequency: Nominal ±10% in accordance with IEC 688

Standard Calibration: Watt/Q is uni-directional, VAR/VA is bi-directional, unless otherwise specified

Dielectric Test: 2,000 Vrms for 1 minute; 2,400 Vrms for 1 second

Transient/Surge Test: ANSI C37.90a (IEEE 472) BEAMA 219

Response Time: ≤200 msec to 90%, ≤400 msec to 99%

Calibration: Full scale, ±10% standard; Zero, ±2% standard

UL Approved Models: W10000, W10004, W15000, W20000, W20004, W25000, W25004, W30000, W30004, DW10000, DW10004, DW15000, DW15004, DW20000, DW20004, DW25000, DW25004, DW30000, DW30004, R10000, R10004, R15000, R15004, R20000, R20004, R25000, R25004, R30000, R30004, DR10000, DR10004, DR15000, DR15004, DR20000, DR20004, DR25000, DR24004, DR30000, DR30004

Potential Table

OPTION	NOMINAL INPUT	POTENTIAL RANGE WITH ACCURACY (SELF-POWERED)	POTENTIAL RANGE WITH ACCURACY (EXTERNAL-POWERED)	MAXIMUM BURDEN AT NOMINAL INPUT	POTENTIAL OVERLOAD CONTINUOUS
0	100 - 120 V	85 - 150 V	10 - 150 V	0.1 VA *	180 V
1	63 - 69 V	50 - 90 V	10 - 90 V	0.1 VA *	100 V
2	208 - 240 V	170 - 300 V	20 - 300 V	0.1 VA *	350 V
3	460 - 480 V	325 - 575 V	30 - 575 V	0.1 VA *	700 V
4	575 - 600 V	425 - 750 V	40 - 750 V	0.1 VA*	900 V
5	265 - 277 V	170 - 300 V	20 - 300 V	0.1 VA*	350 V
6	333 - 347 V	325 - 575 V	30 - 575 V	0.1 VA*	700 V

* Self-powered units have a burden of < 3 VA across either ΦA-N, or ΦA-ΦB.

Current Table

OPTION	INPUT	OVER-RANGE WITH ACCURACY	MAXIMUM BURDEN	OVERLOAD CONTINUOUS	OVERLOAD 10 SEC/HOUR	OVERLOAD 1 SEC/HOUR
0	0 - 5 A	10 A	0.5 VA	15 A	30 A	200 A
1	0 - 1 A	2 A	0.5 VA	3 A	6 A	100 A
2	0 - 2 A	4 A	0.5 VA	6 A	12 A	150 A
3	0 - 10 A	20 A	0.5 VA	30 A	50 A	300 A

Output Table

OPTION	RANGE FULL SCALE	OUTPUT LOADING	COMPLIANCE OR MAXIMUM CURRENT
0	0 ± 1 mA	0 - 10,000 Ohms	± 11 V
1	0 ± 3 mA	0 - 3,300 Ohms	± 11 V
2	0 ± 5 mA	0 - 2,000 Ohms	± 11 V
3	0 ± 10 mA	0 - 1,000 Ohms	± 11 V
4	4 - 20 mA	0 - 750 Ohms	15 V
5	0 ± 100 mV	20 Ohms - ∞	5 mA
6	0 ± 1 V	200 Ohms - ∞	5 mA
7	0 ± 5 V	1,000 Ohms - ∞	5 mA
8	0 ± 10 V	2,000 Ohms - ∞	5 mA
9	1 - 5 V	1,000 Ohms - ∞	5 mA

Standard Calibration of Watts, VAR, Q, or VA Per Element

A \ V	100 - 120 V	60 - 69 V	208 - 240 V	460 - 480 V	575 - 600 V	265 - 277 V	333 - 347 V
0 - 5 A	500	325	1,000	2,000	2,500	1,000	1,500
0 - 1 A	100	65	200	400	500	200	300
0 - 2 A	200	130	400	800	1,500	400	600
0 - 10 A	1,000	650	2,000	4,000	5,000	2,000	3,000

Application Table

APPLICATION AND CONNECTION	NUMBER OF ELEMENTS	MODEL NUMBER SERIES				RESTRICTIONS	
		WATT	VAR	Q	VA	VOLTAGE	CURRENT
1 PHASE, 2 WIRE	1	DW10XXX	DR10XXX	DQ10XXX	DVA10XXX	NONE	NONE
1 PHASE, 3 WIRE	1	DW10XXX	DR10XXX	DQ10XXX	DVA10XXX	NONE	NONE
1 PHASE, 3 WIRE	1½	DW15XXX	DR15XXX	DQ15XXX	DVA15XXX	NONE	NONE
3 PHASE, 3 WIRE	1½	DW15XXX	DR15XXX	DQ15XXX	DVA15XXX	BALANCED	NONE
3 PHASE, 3 WIRE	2	DW20XXX	DR20XXX	DQ20XXX	DVA20XXX	NONE	NONE
3 PHASE, 3 WIRE	2½	DW25XXX	DR25XXX	DQ25XXX	DVA25XXX	NONE	NONE
3 PHASE, 4 WIRE	2½	DW25XXX	DR25XXX	DQ25XXX	DVA25XXX	BALANCED	NONE
3 PHASE, 4 WIRE	3	DW30XXX	DR30XXX	DQ30XXX	DVA30XXX	NONE	NONE

Available Models – AC Power Transducers

To Order, Specify:

A. ENCLOSURE

Extruded Aluminum Metal, Surface Mount	(no prefix)
ABS DIN, Rail Mount	D

B. MODEL

Watt	W
VAR	R
Q	Q
VA	VA
Watt/VAR*	WR
Watt/Q	WQ

C. CONFIGURATION

1 Element	10
1-1/2 Element	15
2 Element	20
2-1/2 Element	25
3 Element	30

D. INPUT NOMINAL VOLTAGE (Reference Potential Table)

100 - 120 V	0
63 - 69 V	1
208 - 240 V	2
460 - 480 V	3
575 - 600 V	4
265 - 277 V	5
333 - 347 V	6
Special	X

E. INPUT CURRENT (Reference Current Table)

0 - 5 A	0
0 - 1 A	1
0 - 2 A	2
0 - 10 A	3
0 - 25 A	4
Special	X

F. OUTPUT (Reference Output Table)

0 ± 1 mA (0 - 10,000 Ohms)	0
0 ± 3 mA (0 - 3,300 Ohms)	1
0 ± 5 mA (0 - 2,000 Ohms)	2
0 ± 10 mA (0 - 1,000 Ohms)	3
4 - 20 mA (0 - 750 Ohms)	4
0 ± 100 mV (2,000 Ohms min.)	5
0 ± 1 V (2,000 Ohms min.)	6
0 ± 5 V (1,000 Ohms min)	7
0 ± 10 V (2,000 Ohms min)	8
1 - 5 V (1,000 Ohms min)	9
Special	X

Note: 4 - 20 mA units are uni-directional. If a bi-directional unit is required, use output designator X and state.

G. SUFFIX (If Applicable)

25 - 125% Calibration Adjustment	A
50 Hz	C
400 Hz	D
External Power, 85 - 150 VAC	E
External Power, 170 - 300 VAC	F
4 - 20 mA Two-Wire Loop Output	T
DC Aux Power (Please Specify)	K
Case Ground Terminal ①	G
Special Calibration or Option	X

① Metal case models only.

SPECIAL CALIBRATION INSTRUCTIONS

Please specify: 1. CT Ratio; 2. PT Ratio; 3. Desired Full scale Calibration in kW, kVAR, kQ, or kVA.

EXAMPLE: DW-25-0-0-3-E-X is the ordering code for a Watt Transducer in a DIN rail mount case, 2-1/2 element, 100-120 V input voltage, 0-5 A input current, 0 ± 10 mA output, 85-150 VAC external power, special calibration.

See pages 31 - 33 for connections.

AC Energy Transducers

Watt/Watt-hour • VAR/VAR-hour Q/Q-hour • Combined Watt/Watt-hour and VAR/VAR-hour or Watt/Watt-hour and Q/Q-hour Uni-directional or Bi-directional

All these transducers are high accuracy electronic multiplying devices for measuring consumed energy. Mercury-wetted contacts provide isolated bounce-free output for driving electromechanical counters; a solid-state output is included for electronic counters and controllers.

Standard Features

- 0.2% of reading accuracy
- Voltage, current, and process outputs
- Low temperature coefficient
- No zero adjustment ever required
- Low burdens
- Exceptional long-term stability
- Self-powered or externally powered
- Standardized wiring and mounting
- Metal surface mount cases

Specifications

Accuracy (@ 25°C ±2°C)

Watt/Watt-hour: $\frac{0.19\% \text{ of reading}}{\text{Cos}\Theta}$ ±0.01% of full scale

VAR/VAR-hour: $\frac{0.19\% \text{ of reading}}{\text{Sin}\Theta}$ ±0.01% of full scale

Q/Q-hour: $\frac{0.19\% \text{ of reading}}{\text{Cos}(\Theta\text{-}60°)}$ ±0.01% of full scale

Temperature Range: -20°C to +70°C

Temperature Coefficient: 0.005%/°C, 50 ppm typical

Operating Humidity: 0-95% non-condensing

Output Ripple Peak: 0.5% of full scale

Power Factor Range: Watt or VAR, any; Q, 0.866 lead to 0 lag

Operating Frequency: Nominal ±10% in accordance with IEC 688

Dielectric Test: 2,000 Vrms for 1 minute; 2,400 Vrms for 1 second (for solid state output); 1,200 Vrms for 1 minute; 1,600 Vrms for 1 second (for mercury wetted relay)

Surge Withstand: ANSI C37.90a (IEEE 472); BEAMA 219; special 5 kV

Response Time: 200 msec to 90%, 400 msec to 99%

Calibration Adjustment: ±10% standard

Zero Adjustment: ±2% standard

Pulse Frequency: ±2% standard

Output, Contacts: SPDT (Form C) Mercury wetted; 100 W, 500 V maximum; contact resistance - 50 mOhms max; expected life - 10^9 operations

Output, Solid-state: Dual open collector transistors; 1.5 W, 300 V maximum

Full scale Counts/Hour: Uni-directional, 10 to 20,000 CPH; Bi-directional, 500 to 20,000 CPH

Potential Table

OPTION	NOMINAL INPUT	POTENTIAL RANGE WITH ACCURACY (SELF-POWERED)	POTENTIAL RANGE WITH ACCURACY (EXTERNAL-POWERED)	MAXIMUM BURDEN	POTENTIAL OVERLOAD
0	120 V	85 - 150 V	0 - 150 V	0.02 VA	180 V
1	69 V	50 - 90 V	0 - 90 V	0.02 VA	100 V
2	230 V	170 - 300 V	0 - 300 V	0.02 VA	350 V
3	460 V	325 - 575 V	0 - 575 V	0.02 VA	680 V
4	600 V	425 - 750 V	0 - 750 V	0.02 VA	750 V

Note: Self-powered units have a potential burden of less than 4.5 VA on terminals 3 and 4.

Current Table

OPTION	INPUT	OVER-RANGE WITH ACCURACY	MAXIMUM BURDEN	OVERLOAD CONTINUOUS	OVERLOAD 10 SEC/HOUR	OVERLOAD 1 SEC/HOUR
0	0 - 5 A	10 A	0.5 VA	15 A	30 A	250 A
1	0 - 1 A	2 A	0.5 VA	3 A	6 A	100 A
2	0 - 2 A	4 A	0.5 VA	6 A	12 A	150 A
3	0 - 10 A	20 A	0.5 VA	30 A	50 A	300 A
4	0 - 25 A	35 A	0.5 VA	35 A	75 A	300 A

Output Table

OPTION	RANGE FULL SCALE	OUTPUT LOADING	COMPLIANCE OR MAXIMUM CURRENT
0	0 ± 1 mA	0 - 10,000 Ohms	± 11 V
1	0 ± 3 mA	0 - 3,300 Ohms	± 11 V
2	0 ± 5 mA	0 - 2,000 Ohms	± 11 V
3	0 ± 10 mA	0 - 1,000 Ohms	± 11 V
4	4 - 20 mA	0 - 750 Ohms	15 V
5	0 ± 100 mV	20 Ohms - ∞	5 mA
6	0 ± 1 V	200 Ohms - ∞	5 mA
7	0 ± 5 V	1,000 Ohms - ∞	5 mA
8	0 ± 10 V	2,000 Ohms - ∞	5 mA
9	1 - 5 V	1,000 Ohms - ∞	5 mA

Analog Full Scale Calibration (Watt/VAR/Q Per Element)

POTENTIAL \ CURRENT	0 - 5 A	0 - 1 A	0 - 2 A	0 - 10 A	0 - 25 A
120 V	500	100	200	1,000	2,500
69 V	325	65	130	650	1,625
230 V	1,000	200	400	2,000	5,000
460 V	2,000	400	800	4,000	10,000
600 V	2,500	500	1,000	5,000	12,500

Note: 1½ Element Transducers are calibrated as 2 element. 2½ Element Transducers are calibrated as 3 element.

Application Table

CONNECTION	MODEL NUMBER					RESTRICTIONS	
	WATT	VAR	Q	WATT/VAR	WATT/Q	VOLTAGE	LOAD
1 PHASE	WH10	RH10	QH10	WRH10	WQH10	NONE	NONE
3 PHASE 3 W	WH15	RH15	QH15	WRH15	WQH15	BALANCED	BALANCED
3 PHASE 3 W	WH20	RH20	QH20	WRH20	WQH20	NONE	NONE
3 PHASE 4 W	WH25	RH25	QH25	WRH25	WQH25	BALANCED	NONE
3 PHASE 4 W	WH30	RH30	QH30	WRH30	WQH30	NONE	NONE

Available Models – AC Energy Transducers

To Order, Specify:

A. MODEL

Watt/Watt-hour	WH
VAR/VAR-hour	RH
Q/Q-hour	QH
Watt/Watt-hour, VAR/VAR-hour	WRH
Watt/Watt-hour, Q-Q-hour	WQH

B. CONFIGURATION

1 Element	10
1-1/2 Element	15
2 Element	20
2-1/2 Element	25
3 Element	30

C. INPUT NOMINAL VOLTAGE (Reference Potential Table)

120 V	0
69 V	1
230 V	2
460 V	3
600 V	4
Special	X

D. INPUT NOMINAL CURRENT (Reference Current Table)

0 - 5 A	0
0 - 1 A	1
0 - 2 A	2
0 - 10 A	3
0 - 25 A	4
Special	X

E. OUTPUT (Reference Output Table)

0 ± 1 mA (0-10,000 Ohms)	0
0 ± 3 mA (0-3,300 Ohms)	1
0 ± 5 mA (0-2,000 Ohms)	2
0 ± 10 mA (0-1,000 Ohms)	3
4 - 20 mA (0-750 Ohms)①	4
0 ± 100 mV (2,000 Ohms min.)	5
0 ± 1 V (2,000 Ohms min.)	6
0 ± 5 V (2,000 Ohms min.)	7
0 ± 10 V (2,000 Ohms min.)	8
1 - 5 V (2,000 Ohms min.)①	9
Special	X

NOTE: 4-20 mA units are uni-directional. If a bi-directional unit is required, use output designator X and state.

① Auxiliary power supply required.

F. PULSE OUTPUT

Solid-state, uni-directional	0
Hg wetted relay, uni-directional	1
Solid-state, bi-directional, WH, RH	2
Hg wetted relay, bi-directional, WH, RH	3
Solid-state, bi-directional, WRH	4
Hg wetted relay, bi-directional, WRH	5
Special	X

G. SUFFIX (If Applicable)

25 - 125% Calibration Adjustment	A
50 Hz	C
400 Hz	D
External Power, 120 VAC	E
External Power, 230 VAC	F
Case ground terminal	G
DC Aux Power (Please Specify)	K
Special	X

PULSE CALIBRATION INSTRUCTIONS

Full scale counts per hour must be stated.

$$\text{CPH} = \frac{\text{CT Ratio x PT Ratio x FS Calibrating Power of Transducer}}{\text{Desired Primary Watt-hours Per Pulse}}$$

EXAMPLE: WH-15-3-1-2-1-C is the ordering code for a Watt/Watt-hour Transducer in a metal surface mount case, 1-1/2 element, 460 V input voltage, 0-1 A input current, 0 ± 5 mA, Hg wetted output relay, uni-directional, 50 Hz power.

See pages 34 - 35 for connections.

Power Factor and Phase Angle Transducers

mTech offers these devices for producing a DC output linearly proportional to the phase angle difference between two inputs. Outputs are bipolar, so leading and lagging signals can be differentiated. The transducers are single-phase; however, they can be used on three phase, four-wire systems with balanced loads.

Phase Angle: These transducers compare two voltage inputs.

Power Factor: For comparing one voltage and one current input*.

*Conversion is required for linear phase angle information.
A table is available on request.

Standard Features

- 0.25% of rated output accuracy
- Voltage, current, and process outputs
- Low burdens
- Low temperature coefficient
- Transient protected
- Standardized wiring and mounting
- Self-powered or externally powered
- ABS DIN rail mount or metal surface mount cases

Specifications

Accuracy (@ 25°C ±2°C): 0.25% of full scale

Temperature Range: -20°C to +70°C

Temperature Coefficient: 0.01%/°C, 100 ppm typical

Operating Humidity: 0-95% non-condensing

Output Ripple Peak: <0.5% of full scale

Power Factor Range: phase angle, any; power factor, as selected by part number

Burden: Current, 0.5 VA (most options); Voltage, 3.5 VA nominal

Overload: Current, 3 x full scale, continuous, 250 A for 1 s/hr; Voltage, 1.2 x full scale continuous

Dielectric Test: 2,000 Vrms for 1 minute

Surge Withstand: ANSI C37.90a (IEEE 472); BEAMA 219; special 5 kV

Response Time: 200 msec to 90%, 400 msec to 99%

Calibration Adjustment: ±10% standard

Zero Adjustment: ±2% standard

Operating Frequency: 60 Hz unless specified otherwise by suffix to part number

Available Models – Power Factor/ Phase Angle Transducers

To Order, Specify:

A. ENCLOSURE

Extruded Aluminum Metal, Surface Mount	(no prefix)
ABS DIN, Rail Mount	D

B. MODEL

Phase Angle	PA
Power Factor	PF

C. NOMINAL INPUT VOLTAGE (± 25%)

120 V	0
69 V	1
240 V	2
460 V	3
600 V	4
Special	X

D. PA - NOMINAL INPUT VOLTAGE

120 V	0
69 V	1
240 V	2
460 V	3
600 V	4
Special	X

PF - INPUT CURRENT

1 - 5 A	0
0.2 - 1 A	1
0.4 - 2 A	2
2 - 10 A	3
5 - 25 A	4
Special	X

E.

Power Factor	Phase Angle	
± 1	± 90°	0
± .7	± 60°	1
± .5	± 45°	2
± .3	± 30°	3
± .2	± 15°	4
Special	Special	X

F. OUTPUT

0 - 1 mA	(0 - 10,000 Ohms)	0
0 ± 1 mA	(0 - 10,000 Ohms)	1
0 ± 0.5 mA	(0 - 20,000 Ohms)	2
0 ± 50 mV	(2,000 Ohms min.)	3
0 ± 100 mV	(2,000 Ohms min.)	4
0 ± 1 V	(2,000 Ohms min.)	5
0 ± 10 V	(2,000 Ohms min.)	6
1 - 5 V	(2,000 Ohms min.)	7
4-20 mA	(0-750 Ohms)	8
0 ±10 mA	(0-1,000 Ohms)	9
Special		X

G. SUFFIX (If Applicable)

25 - 125% Calibration Adjustment	A
50 Hz	C
400 Hz	D
External Power, 120 VAC	E
External Power, 230 VAC	F
Case ground terminal①	G
DC Aux Power (Please Specify)	K
L-L Calibration, Delta Systems	L
4 - 20 mA two-wire loop output	T
Special	X

① Metal case models only.

EXAMPLE: DPA-1-2-0-2-3-D is the ordering code for a Phase Angle Transducer in a DIN rail mount case, 69 VAC input voltage, 240 V, ± 90°, 0 ± 50 mV 10 Ohms min. output, 400 Hz power.

See page 36 for connections.

Frequency Transducers

Frequency: The rate in cycles per second that an AC voltage alternates or the number of times in one second that the wave repeats its pattern. Hertz (Hz) is the unit of measure. mTech Frequency Transducers measure line frequency, using ultra-stable crystal technology to develop a DC signal output proportional to the input. Different center frequencies and spans are available with outputs being either center or downscale zero.

Standard Features

- 0.05% accuracy
- Low temperature coefficient
- Exceptional long-term stability
- Low burden
- Transient protected
- Voltage, current, and process outputs
- Standardized wiring and mounting
- ABS DIN rail mount or metal surface mount cases

Specifications

Accuracy (@ 25°C ±2°C): 0.05% of center frequency

Temperature Range: -20°C to +70°C

Temperature Coefficient: 0.001%/°C, 10 ppm typical

Operating Humidity: 0-95% non-condensing

Power Factor Range: Any

Operating Voltage Range: -30% + 25% of nominal

Dielectric Test: 2,000 Vrms for 1 minute

Burden: 1.5 VA (most options)

Surge Withstand: ANSI C37.90a (IEEE 472); BEAMA 219; special 5 kV

Response Time: 200 msec to 90%, 400 msec to 99%

Calibration Adjustment: ±10% standard

Zero Adjustment: ±2% standard

Available Models – Frequency Transducers

To Order, Specify:

A. ENCLOSURE

Extruded Aluminum Metal, Surface Mount	H
ABS DIN, Rail Mount	DH

B. CENTER FREQUENCY

400 Hz	4
50 Hz	5
60 Hz	6
Special	X

C. FREQUENCY SPAN

50/60 Hz	**400 Hz**	
± 1 Hz	± 10 Hz	1
± 2 Hz	± 20 Hz	2
± 3 Hz	± 30 Hz	3
± 4 Hz	± 40 Hz	4
± 5 Hz	± 50 Hz	5
± 6 Hz	± 60 Hz	6
± 7 Hz	± 70 Hz	7
± 8 Hz	± 80 Hz	8
± 9 Hz	± 90 Hz	9
±10 Hz	±100 Hz	0
Special	Special	X

D. NOMINAL INPUT VOLTAGE

120 V	0
69 V	1
240 V	2
460 V	3
600 V	4
Special	X

E. OUTPUT

0 - 1 mA	0 - 10,000 Ohms	0
0 ± 1 mA	0 - 10,000 Ohms	1
0 ± 0.5 mA	0 - 20,000 Ohms	2
0 ± 50 mV	10 Ohms min.	3
0 ± 100 mV	20 Ohms min.	4
0 ± 1 V	200 Ohms min.	5
0 ± 10 V	2,000 Ohms min.	6
1 - 5 V	1,000 Ohms min.	7
4 - 20 mA	0 - 750 Ohms	8
0 ±10 mA	0 - 1,000 Ohms	9
Special		X

F. SUFFIX (If Applicable)

25 to 125% Calibration	A
External Power, 120 VAC	E
External Power, 230 VAC	F
Case Ground Terminal ①	G
DC Aux Power (Please Specify)	K
4 - 20 mA two-wire loop output	T
Special	X

① Metal case models only.

EXAMPLE: H-6-4-3-7 is the ordering code for a Frequency Transducer in a metal surface mount case, 60 Hz center frequency, ± 4 Hz frequency span, 460 VAC input voltage, 1 - 5 V 1,000 Ohms min. output.

See page 37 for connections.

RTD and Slidewire Transducers

For measuring temperature of transformer windings and other applications that do not require the accuracy of a linearized RTD reading, mTech makes a series of RTD and Slidewire Transducers. These ultra-linear devices convert a variable input resistance to a voltage, current or process output. For level measurement applications, inverse outputs are available with the output going from maximum to minimum while the resistance changes from minimum to maximum. The devices will accommodate 2, 3, or 4-wire connections to allow virtually every normally used input configuration.

RTD: To measure temperature where the resistance of the RTD changes in a fixed way with changes in temperature. The transducer actually measures resistance and produces an output proportional to the resistance.

Slidewire: For applications such as transformer tap position.

Standard Features

- 0.2% of reading accuracy
- Low temperature coefficient
- Exceptional long-term stability
- Narrow resistance spans
- Voltage, current, and process outputs
- Standardized wiring and mounting
- ABS DIN rail mount or metal surface mount cases

Specifications

Accuracy (@ 25°C ±2°C): 0.19% of reading ±0.01% of span

Temperature Range: -20°C to +70°C

Temperature Coefficient: 0.01%/°C, 100 ppm typical

Operating Humidity: 0-95% non-condensing

Output Ripple (Peak): 0.5% of span (max.)

Dielectric Test: 2,000 Vrms for 1 minute, 2,400 V for 1 second

Surge Withstand: ANSI C37.90a (IEEE 472); BEAMA 219; special 5 kV

Response Time: 200 msec to 90%, 400 msec to 99%

Calibration Adjustment: Span, ±10% standard; zero, ±2% standard

Power Requirement: 120 or 240 VAC, 3.5 watts

Available Models – RTD/Slidewire Transducers

To Order, Specify:

A. ENCLOSURE

Extruded Aluminum Metal, Surface Mount	RES
ABS DIN, Rail Mount	DRES

B. INPUT

Variable Resistance Standard	0
Variable Resistance Inverse	1
10 Cu 1.427 RTD	2
100 Pt 1.385 RTD (DIN)	3
100 Pt 1.392 RTD (REF)	4
120 Ni 1.672 RTD	5
200 Pt 1.385 RTD (DIN)	6
200 Pt 1.392 RTD (REF)	7
500 Pt 1.385 RTD (DIN)	8
500 Pt 1.392 RTD (REF)	9
Special	X

C. OUTPUT

0 ± 1 mA	0 - 10,000 Ohms	0
0 ± 3 mA	0 - 3,300 Ohms	1
0 ± 5 mA	0 - 2,000 Ohms	2
0 ± 10 mA	0 - 1,000 Ohms	3
4 - 20 mA	0 - 750 Ohms.	4
0 ± 100 mV	20 Ohms min.	5
0 ± 1 V	200 Ohms min.	6
0 ± 5 V	1,000 Ohms min.	7
0 ± 10 V	2,000 Ohms min.	8
1 - 5 V	1,000 Ohms min.	9
Special		X

D. AUXILIARY POWER

120 VAC	0
230 VAC	1
DC Aux Power (Please Specify)	K
Special	X

E. MEASURED UNITS

Ohms	O
Degrees Fahrenheit	F
Degrees Celsius	C
Degrees Kelvin	K

F. Zero Output from Transducer
State in Ohms or degrees Fahrenheit, Celsius, or Kelvin

G. Low End of Output Span
State in Ohms or degrees Fahrenheit, Celsius, or Kelvin

H. Top End of Output Span
State in Ohms or degrees Fahrenheit, Celsius, or Kelvin

I. SUFFIX (If Applicable)

25 to 125% Calibration	A
Case Ground Terminal ①	G
Special	X

① Metal case models only.

EXAMPLE: DRES-5-4-0-F-0 °F-0 °F-100°F is the ordering code for an RTD Transducer in a DIN rail mount case, 120 Ni 1.672 RTD input, 4 - 20 mA 0 - 750 Ohms output, 120 VAC auxiliary power, degrees Fahrenheit measured unit, 0°F zero output, 0°F low end of output span, 100°F top end of output span.

See page 37 for connections.

DC Voltage Transducers/Ground Fault Detectors

Dual-purpose units that provide an analog output proportional to the DC input and that check for grounding of either pole of a floating battery system. mTech offers these transducers for various battery voltages and ground leakage sensitivities (as little as 5 mA at 125 VDC). Transient protection is through multipole input and output filters. Advanced operational amplifiers with ultra-high input impedance ensures a high degree of input/output isolation and very low battery burden. The NO or NC* contact remains energized only as long as the alarm condition exists. Two top-mounted LEDs indicate whether the fault was positive or negative and stay lit until the RESET button is pushed.

*Shipped NO unless NC is specified.

Standard Features

- Low battery drain
- Sensitive ground leakage detection
- High accuracy and linearity
- Transient protection
- Low temperature coefficient
- Standardized wiring and mounting
- ABS DIN rail mount or metal surface mount cases

Specifications

Accuracy (@ 25°C ±2°C): 0.2% of reading ±0.01% of rated output

Temperature Range: -20°C to +70°C

Temperature Coefficient: 0.005%/°C, 50 ppm typical

Operating Humidity: 0-95% non-condensing

Output Ripple (Peak): Less than 0.5% of full scale

Burden: Less than 0.10 watts at full scale

Overload with Accuracy: 1.2 x full scale

Overload without Damage: 1.33 x full scale

Dielectric Test: 1,500 VAC for 1 minute

Surge Withstand: ANSI C37.90a (IEEE 472); BEAMA 219; special 5 kV

Response Time: 200 msec to 90%, 400 msec to 99%

Calibration Adjustment: ±10% standard

Zero Adjustment: ±2% standard

Available Models – DC Voltage Transducers/Ground Fault Detectors

To Order, Specify:

A. ENCLOSURE

Extruded Aluminum Metal, Surface Mount	(no prefix)
ABS DIN, Rail Mount	D

B. MODEL

DC Voltage	DCV
DC Current	DCA

C. CONFIGURATION

DC Current	0
DC Voltage Only	1
DC Voltage + Ground Fault*	2
Ground Fault Only*	3

*Not available in DIN mount.

D. FULL SCALE VOLTAGE

0 - 150 V	0
0 - 60 V	1
0 - 30 V	2
0 - 300 V	3
0 - 750 V	4
Current	Specify
Special	X

E. NOMINAL BATTERY VOLTAGE

125 V	0
48 V	1
24 V	2
250 V	3
600 V	4
Special	X

F. OUTPUT

0 - 1 mA	0 - 10,000 Ohms	0
0 - 3 mA	0 - 3,300 Ohms	1
0 - 5 mA	0 - 2,000 Ohms	2
0 - 10 mA	0 - 1,000 Ohms	3
4 - 20 mA	0 - 750 Ohms	4
0 - 100 mV	20 Ohms min.	5
0 - 1 V	200 Ohms min.	6
0 - 5 V	1,000 Ohms min.	7
0 - 10 V	2,000 Ohms min.	8
1 - 5 V	1,000 Ohms min.	9
Special		X

G. AUXILIARY POWER

120 VAC	0
240 VAC	1
DC Aux Power (Please Specify)	K
Special	X

H. SUFFIX (If Applicable)

25 to 125% Calibration	A
Case Ground Terminal ①	G
4 - 20 mA two-wire loop output	T
Special	X

① Metal case models only.

EXAMPLE: DDCV-2-0-1-9-0 is the ordering code for a DC Voltage Transducer/Ground Fault Detector in a DIN rail mount case, 0 - 150 V full scale voltage, 48 V battery voltage, 1 - 5 V 1,000 Ohms min. output, and 120 VAC auxiliary power.

See page 37 for connections.

Line Post Sensor Transducers/Fault Alarms

mTech offers a series of transducers that interface with most line post sensors on the market. These devices can also serve as simple three-phase current or voltage transducers with the added feature of providing alarms on faults. In addition to monitoring excessive voltages or currents or an excessive drop in the voltage on the network, they can be used to detect any unbalance between the three phases, as well as ground faults. With multiple transducers along a line, fault locations can be pinpointed accurately and quickly.

Input Type: Line post sensor outputs are typically in the form of low level AC voltage; however, some might be as high as 120 volts or in the form of a 5 amp current. In other instances, the transducer may have to measure voltages or currents in a three-phase system, either directly or through current or potential transformers. mTech isolates inputs to its transducers from each other, from the power supply, and from the outputs. The user must specify the form of the output from the sensor that will be the transducer's input.

Configuration: One analog output and one alarm contact are available for each of the three phases. For the neutral line (separate section follows), there can be only one output, either analog or relay contact. The user can specify any of the given combinations of outputs for the desired application. Unused terminals are left unconnected within the transducer.

Analog Output: Various outputs are available as standard. Users can match the inputs to their RTUs, PLCs, meters, and other instrumentation. Outputs are isolated from the inputs and the power supply, but not from each other; the negative output terminals are tied together internally.

Neutral: Calculated as the vector sum of the inputs to the three phases, representing the current through the neutral line or the unbalance between currents or voltages of the three phases. This feature is very useful for fault detection. A neutral specified as 33% of phase indicates that any unbalance between the inputs from the three phases amounting to 33% of the full scale input to one phase will result in a full scale output for the neutral line. Different sensitivities can be selected, dependent upon the permissible unbalance in the system.

Alarm % of Full scale: A number of standard set points are available for the Alarm, as well as any other user-specified value. The set point is given as a percentage of full scale.

Alarm Function: An alarm can be triggered if the input either exceeds or goes below the set point. As a result, the transducer can monitor either overvoltage or undervoltage. If used for monitoring current through the line, the transducer should have its alarm set for overcurrent. The neutral alarm should be set to detect either any unbalance or excess of the neutral current limits.

Alarm Contact: Users can specify either Normally Open (NO) or Normally Closed (NC) contacts for the alarm outputs. These outputs are isolated from each other, the inputs, the power supply, and the analog outputs.

Auxiliary Power: External power is required to energize mTech's line post sensor transducers. Five standard AC and DC options are available. If you have different requirements, please consult the factory.

Specifications

Accuracy (@ 25°C ±2°C): 0.25% of full scale

Temperature Range: -20°C to +70°C

Operating Humidity: 0-95% non-condensing

Long-Term Drift: <0.1%/year, non-cumulative

Power Factor: Any

Input Impedance: Input 0-20 V, 1 M Ohms typical; all others, 0.1 VA input burden max.

Output Ripple: 0.5% of full scale max.

Dielectric Test: 2,000 Vrms for 1 minute

Surge Withstand: ANSI C37.90a (IEEE 472)

Response Time: 200 msec to 90%; 400 msec to 99%; alarm - 10 msec minimum (actual trip time depends on magnitude of fault and operating level prior to fault)

Calibration Adjustment: Span, ±10% standard; zero, ±2% standard; alarm, ±25% standard

Operating Frequency: 60 Hz ±10% with accuracy unless specified otherwise by suffix to part number

Power Requirements: 8 VA maximum

Available Models – Line Post Sensor Transducers/Fault Alarms

To Order, Specify:

A. MODEL

Line Post Sensor Transducer (Supplied in Extruded Aluminum Metal, Surface Mount)	LP

B. INPUT TYPE

AC Current	A
AC Voltage	V

C. CONFIGURATION

4 Analog Outputs & 3 Alarms	3
3 Analog Outputs & 4 Alarms	4
3 Analog Outputs & 3 Alarms	5
4 Analog Outputs Only	6
3 Analog Outputs Only	7
4 Alarms Only	8
3 Alarms Only	9

D. INPUT TO TRANSDUCER

5 A	0
10.00 V	1
2.00 V	2
3.00 V	3
4.00 V	4
5.00 V	5
120 V	6
Special	X

E. NEUTRAL % OF PHASE

33%	0
10%	1
20%	2
25%	3
50%	4
75%	5
100%	6
Special	X
If not applicable	Z

F. ANALOG OUTPUT

0 - 1 mA	0 - 15,000 Ohms	0
0 - 3 mA	0 - 5,000 Ohms	1
0 - 5 mA	0 - 3,000 Ohms	2
0 - 10 mA	0 - 1,500 Ohms	3
4 - 20 mA	0 - 750 Ohms.	4
0 - 100 mV	20 Ohms min.	5
0 - 1 V	200 Ohms min.	6
0 - 5 V	1,000 Ohms min.	7
0 - 10 V	2,000 Ohms min.	8
1 - 5 V	1,000 Ohms min.	9
Special		X

G. ALARM % OF FULL SCALE

133%	0
150%	1
100%	2
75%	3
50%	4
33%	5
25%	6
Special	X

H. AUXILIARY POWER

120 VAC	0
240 VAC	1
24 Vdc	2
48 Vdc	3
125 Vdc	4
Special	X

I. ALARM CONTACT

Normally Open	NO
Normally Closed	NC
If not applicable	Z

J. ALARM FUNCTION

Overvoltage/Overcurrent	O
Undervoltage	U
If not applicable	Z

K. SAFETY FEATURE

On Power Supply Failure, Relays Switch to ALARM	A
On Power Supply Failure, Relays Switch to NORMAL	N
If not applicable	Z

L. SUFFIX

25% - 125% Adjustment (analog output only)	A
50 Hz	C
Case Ground Terminal	G
Special	X

EXAMPLE: LP-A-4-0-2-3-5-0-NO-O-A-G is the ordering code for a Line Post Sensor Transducer in a metal surface mount case, an AC current input, a 3 analog outputs/4 alarms configuration, a 5 A input to transducer, 20% neutral % of phase, 0-10 mA 0-1,500 Ohms analog output, 33% alarm % of full scale, 120 VAC auxiliary power, a Normally Open alarm contact, overvoltage/overcurrent alarm function, power supply failure relays that switch to ALARM, and a case ground terminal.

See page 38 for connections.

Line Post Sensor Transducer System

mTech offers a special system for converting three-phase AC voltage and current signals from Lindsay series CMI and CVMI sensors into DC current proportional to the input AC current and AC voltage amplitude. The LPAV3 is a Line Post Sensor Transducer System that also converts the phase relationship between the current and voltage signals into a DC current proportional to the phase angle difference between the current and voltage waveforms that can be readily converted to power factor.

The system provides an alarm for each current input phase, as well as a neutral alarm. All are adjustable from 50% to 200% of rated input using a single calibrated dial. The neutral alarm (phase unbalance) level is set to trigger at 1/3 the phase level. The phase alarms are maskable and the neutral alarm is preset at the factory. The other alarms are electronically latched and are reset by contact closure at the alarm reset terminals. If momentary alarms are desired (present only while the fault exists), the alarm reset terminals can be shorted.

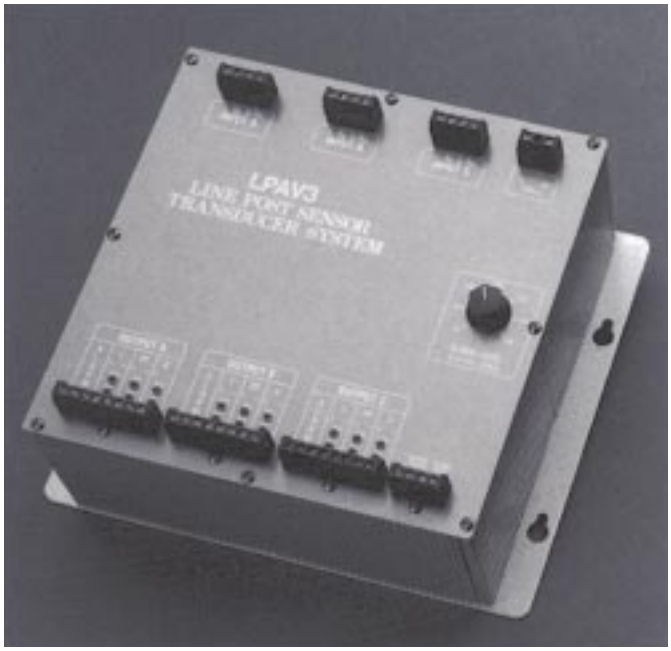

Specifications

Input: Current, 0-15 VAC; voltage, 0-15 VAC; phase angle, 60° lead to 60° lag

Overload Current: 20 VAC continuous

Overload Voltage: 20 VAC continuous

Operating Frequency: 60 Hz

Operating Humidity: 0-95% non-condensing

Temperature Range: -30° to +60°C

Maximum Temperature Effects on Accuracy: ±0.5% of rated output

Accuracy @25°C (% RO at 60 Hz): 0.5% of rated output

Output: Current, 0-1.5 mA; voltage, 0-1.5 mA; power factor, 0 ±1.5 mA

Output @ Rated Full scale: 1 mA

Output Ripple: 0.5% peak max.

Output Load: 0-10,000 Ohms

Compliance Voltage (min.): 11 VDC

Calibration Adjustment: ±10%

Zero Adjustment: ±2%

Response Time (to 99%): <400 msec

Dielectric Withstand Voltage (Input to Output to Case): 1,500 VAC for 1 min.

Surge Withstand Capability: ANSI C37.90A; (IEEE 472)

Impulse Test, Uni-directional: 1.2 x 50 μsec 6 kV crest

Test Voltage Across Output: 100 Volts RMS, 2 sec

Output Open or Short Circuit: Protected

Open Circuit Output at Rated Input: <15 Vdc

Alarm Contacts: Normally open, SPST, form “A” contacts that will close and retain closure until fault has been cleared and alarm has been reset

Phase Alarm Contacts: SPST form “A”, 120 VAC, 3 amp resistive; trip levels adjustable from 50 to 200% of full scale

Neutral Alarm Contacts: SPST form “A”, 120 VAC, 3 amp resistive; neutral contact trip level adjustable from 16% to 70% of full scale

Alarm Contact Reset: Momentary alarms can be selected by placing a jumper across reset terminals

Available Models – Line Post Sensor Transducer System

To Order, Specify:

A. MODEL

Line Post Sensor Transducer System	LPAV3

B. SENSOR INPUT CURRENT

600 A: 10 V	0
600 A: 6 V	1
Special	X

C. SENSOR INPUT VOLTAGE

INPUTS		RATIO	
0-15 kV	0	1400: 1 V	0
0-25 kV	1	2200: 1 V	1
0-35 kV	2	3300: 1 V	2
Special	X	Special	X

D. POWER FACTOR

±0.5	0
±0.3	1
±0.2	2
Special	X

E. NEUTRAL % OF PHASE CURRENT

33%	0
10%	1
20%	2
25%	3
50%	4
75%	5
100%	6
Special	X

F. OUTPUT

0-1 mA	(0-10,000 Ohms)	0
0-100 mV	(20 Ohms min.)	1
0-1 V	(200 Ohms min.)	2
0-5 V	(1,000 Ohms min.)	3
0-10 V	(2,000 Ohms min.)	4
1-5 V	(1,000 Ohms min.)	5
Special		X

G. AUXILIARY POWER

120 VAC	0
240 VAC	1
12 Vdc	2
24 Vdc	3
48 Vdc	4
125 Vdc	5
Special	X

H. SUFFIX

50 Hz	C
400 Hz	D
Case Ground Terminal	G
Special	X

EXAMPLE: LPAV3-1-22-0-4-5-3-D is the ordering code for a Line Post Sensor Transducer System in a metal surface mount case, 600 A: 6 V sensor input current, 0-35 kV sensor input voltage with a 3300: 1 V ratio, ±0.5 power factor, 50% neutral % of phase current, 1-5 V (1,000 Ohms min.) output, 24 Vdc auxiliary power, 400 Hz.

See page 38 for connections.

Portable Test Set for Power Transducers

As a leading international manufacturer of power transducers, mTech knows precisely what is required to maintain the highest possible accuracies of these devices. Combined instrumentation expertise has led to the development of a portable transducer test set the equivalent of seven different instruments in one self-contained field unit. The Model TCS-914 provides field technicians with an easy and highly accurate, on-site means of testing all of the transducers throughout their plant or power system.

Tests a wide range of models: The system is designed for maximum versatility. It will test most mTech power transducers (watt, VAR, voltage, current, expanded scale voltage, and power factor models), as well as models of the same types made by other manufacturers. More specifically, it will measure, and indicate on a digital display, current, voltage, watts, VAR, Q, VA, and it includes a second display to indicate null balance percent error and actual transducer output in engineering units. The TCS-914 also has special features such as expanded scale voltage testing and the capability of monitoring a wide range of outputs. In fact, no external adaptors are needed for transducers with outputs such as 0-1 mA, 4-20 mA, 0-5 mA, 0-10 V, and others.

Built for ease of use and to last in the field: The TCS-914 is completely self-contained and mounted inside a rugged, environmentally sealed, polycarbonate carrying case. The case comes with a hinged cover and storage compartment. At only 47 cm (18.5") long by 37 cm (14.6") wide by 19 cm (7.5") high and 12 kg (26.5 lbs), it is both compact and lightweight.

The controls have been designed with the operator in mind. All test procedures are easy to learn and perform. The front panel incorporates thumbwheel switches and percent of setting controls for selecting current, voltage, and power factor. In addition, there are facilities for full scale calibrating of watts, VAR, volts, and amps, plus a frequency selector switch for 50 Hz and 60 Hz.

The solid-state TCS-914 is easily programmable, making it extremely versatile. It generates voltage and current from a stable internal distortion-free source and is independent of source frequency and distortion. All internal standards and parameters measured are true RMS and have an accuracy of 0.1% or higher for measuring: 0 ± 500 watts per element; 0 ± 500 VAR per element; 0-300 volts; 0-10 amps; and field adjustable zero and span for expanded scale volts. All digital meters have an accuracy of 0.05% or higher for measuring: 0-300 volts; 0-19.99 amps; 0 ± 3,000 watts/VAR, true RMS; and 0 ± 19.99 percent error.

Specifications

VOLTAGE OUTPUT:
Range: 0-300 V
Accuracy: ±(0.05% of setting + 0.05% of range)
Resolution: 1 V
Burden: 0-180 V: 100 mA
180-300 V: 50 mA

CURRENT OUTPUT:
Range: 0-9.99 A
Accuracy: ±(0.05% of setting + 0.05% of range)
Resolution: 0.01 A
Compliance: 0-2.8 A: 4.0 V
2.8-9.99 A: 2.0 V

POWER FACTOR:
Range: Full four quadrant in steps of 0.1 P.F.
Accuracy: ±0.1 degrees

FREQUENCY OF OUTPUTS:
50 Hz: 50 Hz ±0.1%
60 Hz: 60 Hz ±0.1%
Sync: Line ±0.5%
External: External source ±0.5%

INTERNAL STANDARDS:

VOLTAGE:
Range: 0-300 V, true RMS
Accuracy: ±(0.05% of reading + 0.05% of range)

CURRENT:
Range: 0-10 A, true RMS
Accuracy: ±(0.05% of reading + 0.05% of range)

WATT:
Range: 0-3,000 W
Accuracy: $\pm\frac{(0.05\% \text{ of reading}}{\text{Cos}\Theta} + 0.05\% \text{ of range})$

VAR:
Range: 0-3,000 VAR
Accuracy: $\pm\frac{(0.05\% \text{ of reading}}{\text{Sin}\Theta} + 0.05\% \text{ of range})$

Q:
Range: 0-3,000 Q
Accuracy: $\pm\frac{(0.05\% \text{ of reading}}{\text{Cos}\,(\Theta\text{-}60°)} + 0.05\% \text{ of range})$

VA:
Range: 0-3,000 VA
Accuracy: ±(0.05% of reading + 0.05% of range)

STANDARDS OUTPUT:
Range: 0-4 V, automatically adjustable
Accuracy: ±0.1% full scale

OUTPUT PARAMETER DISPLAY:
Type: 4-1/2 digit LED
Accuracy: ±(0.03% of reading + 0.02% full scale + 2 counts)

TRANSDUCER INPUT:
Ranges: 0-1 mA, 0-10 mA, 4-20 mA, 4-12-20 mA
0-1 V, 0-10 V
Other ranges available upon request

OUTPUT DISPLAY:
Type: 3-1/2 digit LED
Metering Mode:
Accuracy: ±(0.03% of reading + 0.02% full scale + 1 count)
Null-Balance Mode:
Range: 0-±19.99%
Accuracy: ± 0.1% ± 1 count

AMBIENT:
Temperature: 25°C ± 15°C
Humidity: 0-90%, non-condensing

POWER-TO-OPERATE:
100, 120 VAC +10% 60 Hz
220, 240 VAC +10% 50 Hz

DIMENSIONS:
47 cm (18.5") L x 37 cm (14.6") W x 19 cm (7.5") H

WEIGHT:
12 kg (26.5 lbs)

Dimensions

DIN Rail Mount Cases

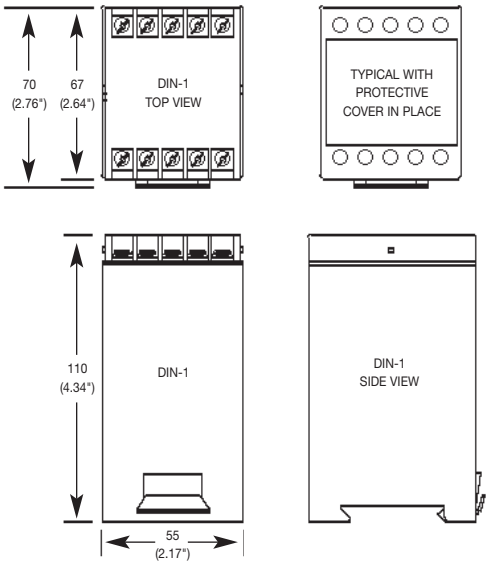

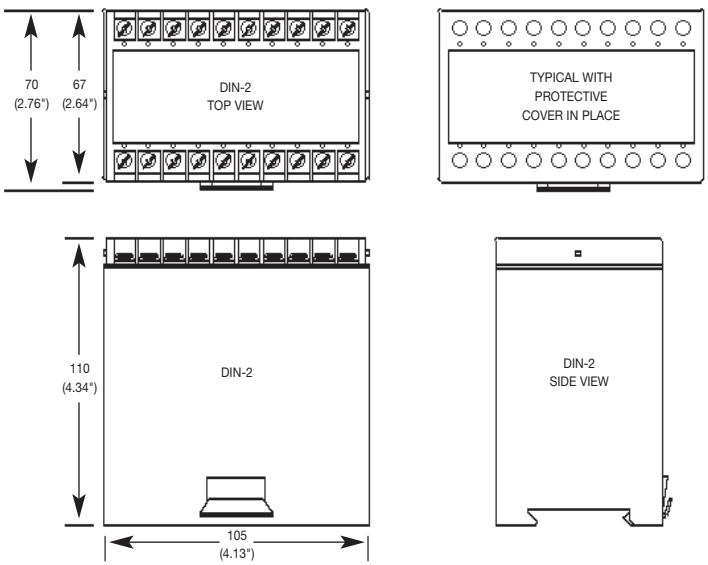

DIN-1
All single Current and Voltage and RTD/Slidewire models

DIN-2
All multiple Current and Voltage and Power, Power Factor/Phase Angle, Frequency, DC Voltage/Current models

Metal Surface Mount Cases

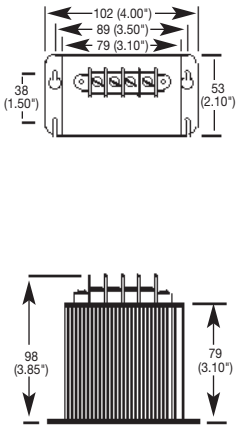

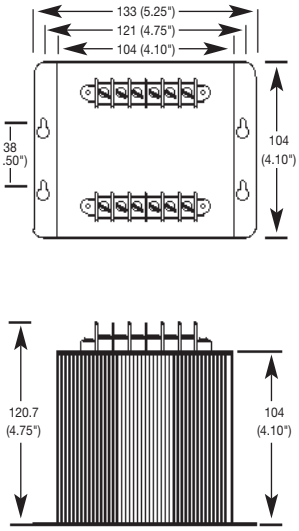

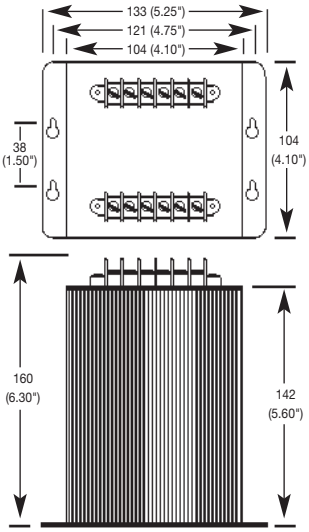

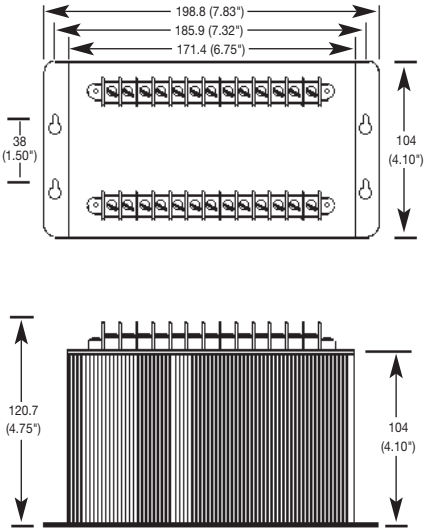

Size 1
Current: A1XX, RA1XX, and TA1X4 except A1X4, A1X9
Voltage: V1XX, RV1XX, VX1XX, and TX1X4 except V1X4, V1X9

Size 2
Current: A3XX, SA3XX, A1X4, A1X9
Voltage: V3XX, V1X4, V1X9
Power Factor/Phase Angle: All
Frequency: All
RTD/Slidewire: All
DC Voltage/Ground Fault: All

Size 3
Current: BA1XX
AC Power: All

Size 4
AC Energy

Dimensions are in millimeters (inches).

Metal Surface Mount Cases

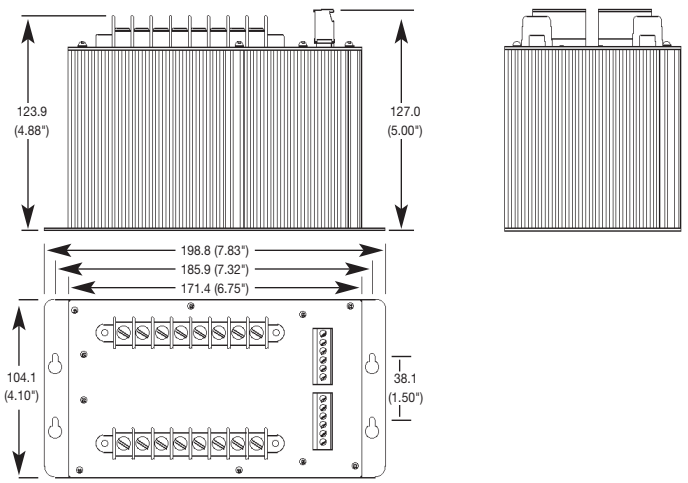

Size 5
AC Energy

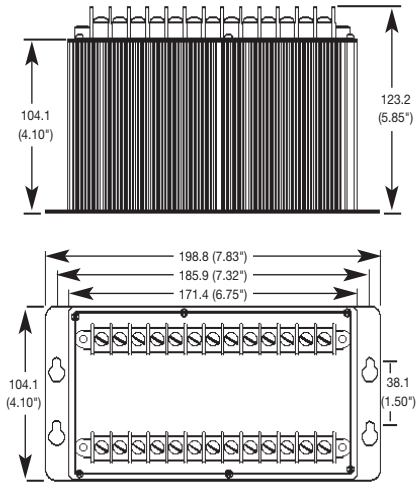

Size 6
Line Post Sensor Transducer/Fault Alarm: All

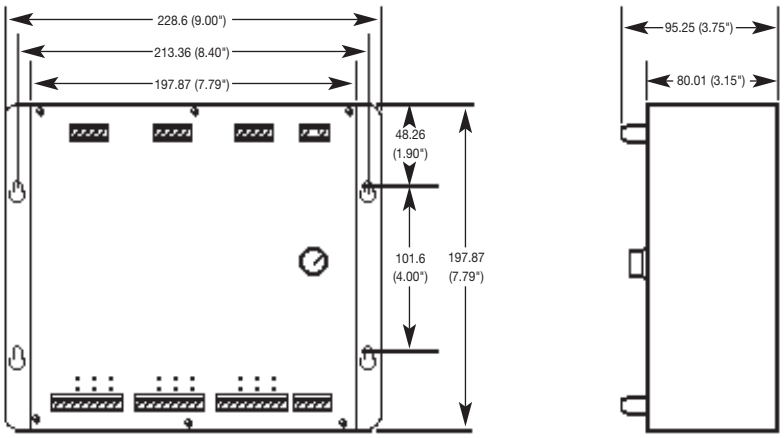

Special Case:
Line Post Sensor Transducer System

Dimensions are in millimeters (inches).

Current Transducers

DIN Rail Mount Cases

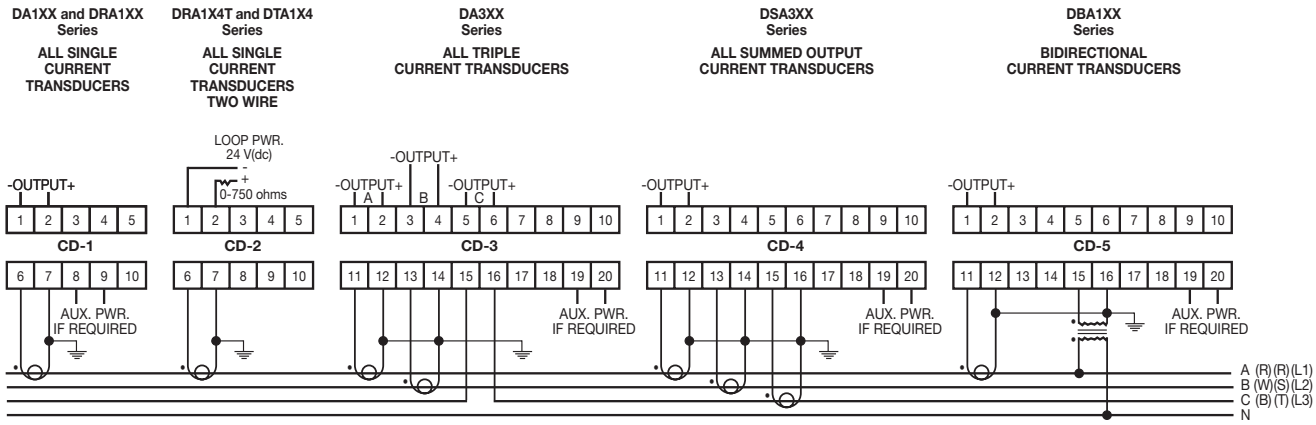

Notes:

1. All 4-20 mA, 1-5 V and any other live zero output transducer must have an external (auxiliary) source of power.
2. Third phase of connection drawing (CD-3) is shown as direct connect. It is typical for any transducer where the incoming signal will not exceed the rated intput of the transducer.

Metal Surface Mount Cases

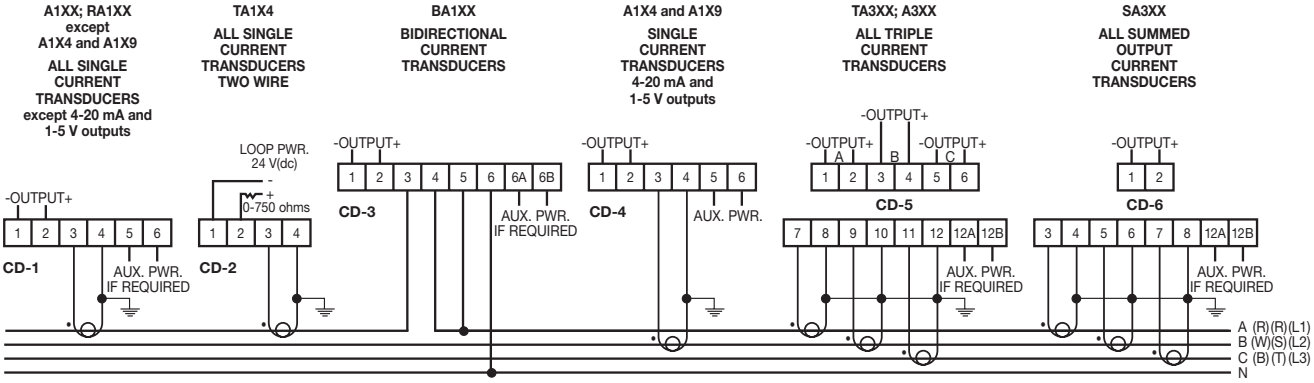

Notes:

1. For supply connections use No. 14 AWG or larger wires rated for at least 75°C (167°F). Use copper conductors only.
2. All 4-20 mA and 1-5 V transducer outputs require an external (auxiliary) source of power.
3. Bi-directional Current transducer (CD-3) must be supplied with a source of AC power that is in phase with the measured current at unity power factor.
4. CD-3 is shown directly connected to the measured source. This is typical for any configuration where CTs and PTs are not used.

Attention:

If the transducer is mounted on a non-metallic or ungrounded surface the installer must provide the means for grounding and bonding as per NEC (National Electric Code) requirements.

Voltage Transducers

DIN Rail Mount Cases

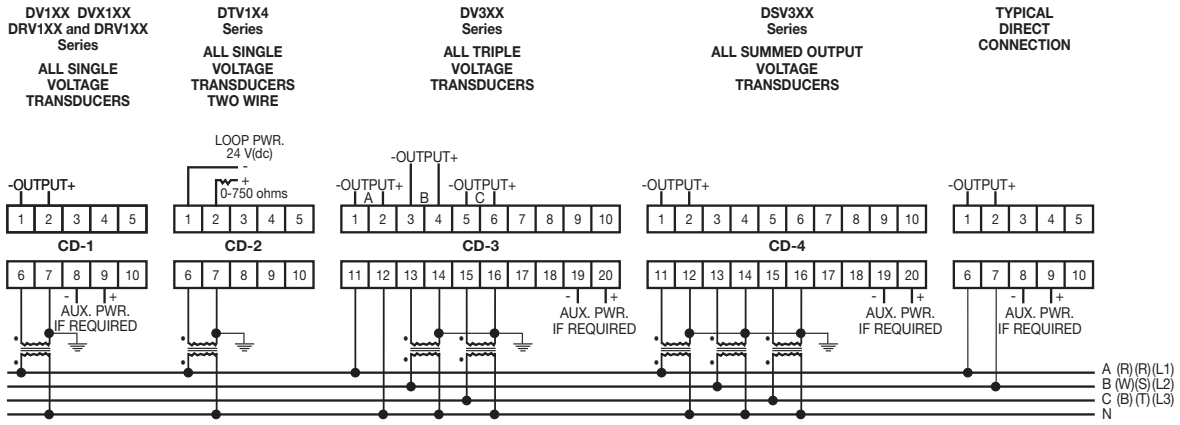

Notes:

1. For supply connections use No. 14 AWG or larger wires rated for at least 75°C (167°F). Use copper conductors only.
2. All 4-20 mA, 1-5 V and other live zero outputs, transducer must have an external (auxiliary) source of power.
3. Third phase of connection drawing (CD-3) is shown as direct connect. It is typical for any transducer where the input will not exceed the rated input of the transducer.

Metal Surface Mount Cases

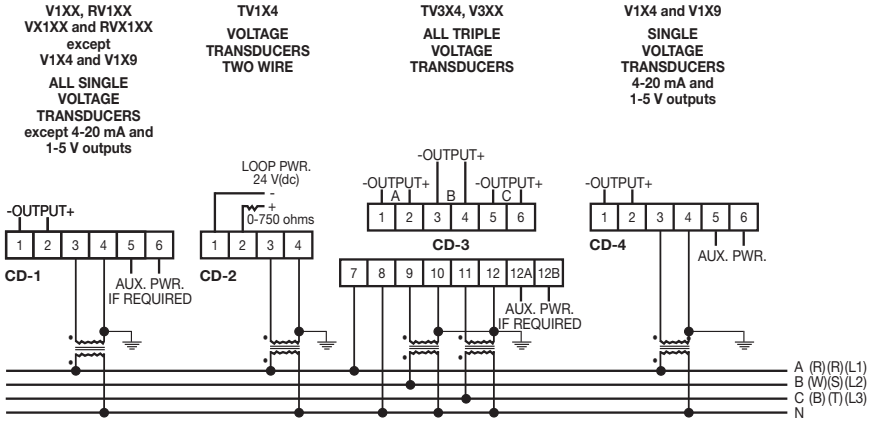

Notes:

1. For supply connections use No. 14 AWG or larger wires rated for at least 75°C (167°F). Use copper conductors only.
2. All 4-20 mA and 1-5 V transducer outputs require an external (auxiliary) source of power.
3. CD-3 is shown with phase A directly connected to the power line; this is typical for any transducer where the input voltage does not exceed the input rating.

Attention:

If the transducer is mounted on a non-metallic or ungrounded surface the installer must provide the means for grounding and bonding as per NEC (National Electric Code) requirements.

DIN Rail Mount Cases

AC Power Transducers

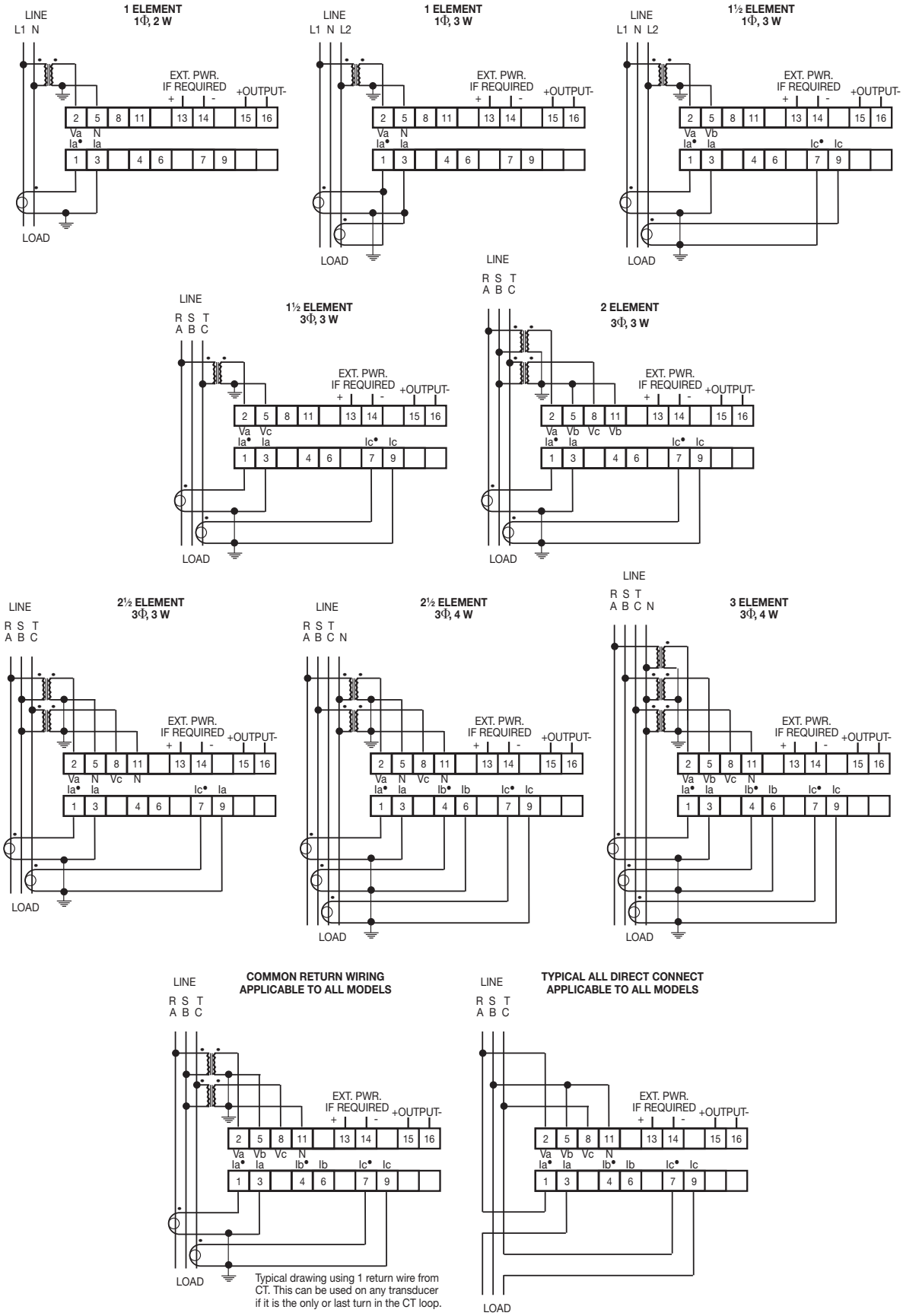

AC Power Transducers (Single Output)

Metal Surface Mount Cases

1 ELEMENT
1Φ, 2 W

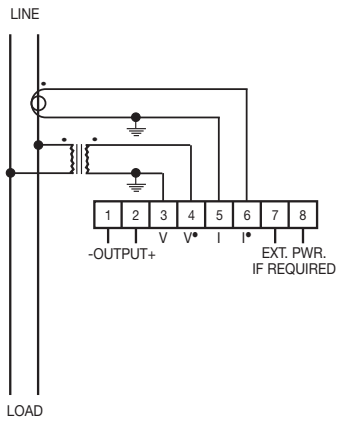

1 ELEMENT
1Φ, 3 W

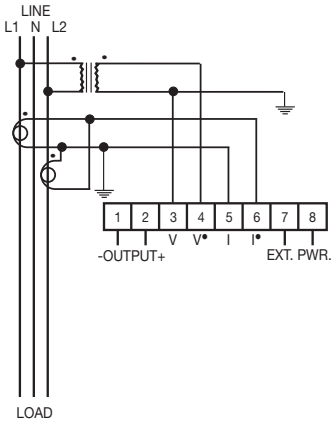

1½ ELEMENT
1Φ, 3 W

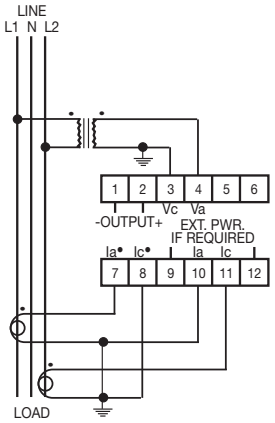

1½ ELEMENT
3Φ, 3 W

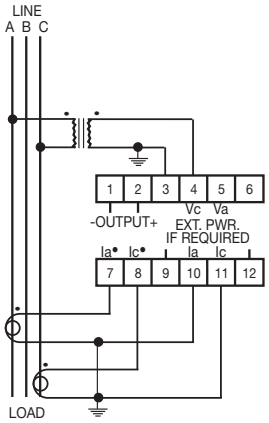

2 ELEMENT
3Φ, 3 W

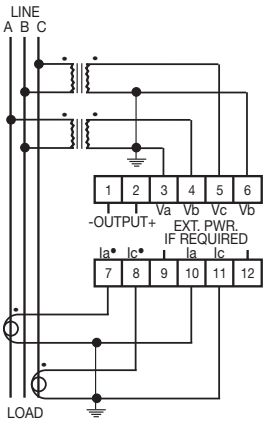

2½ ELEMENT
3Φ, 3 W

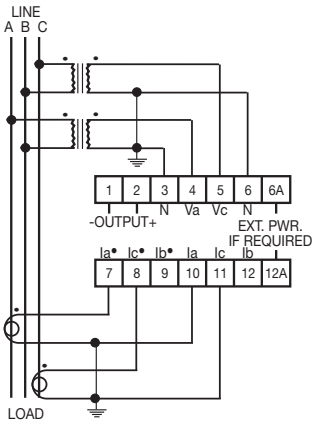

2½ ELEMENT
3Φ, 4 W

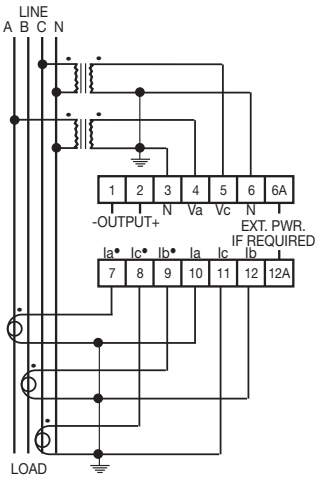

3 ELEMENT
3Φ, 4 W

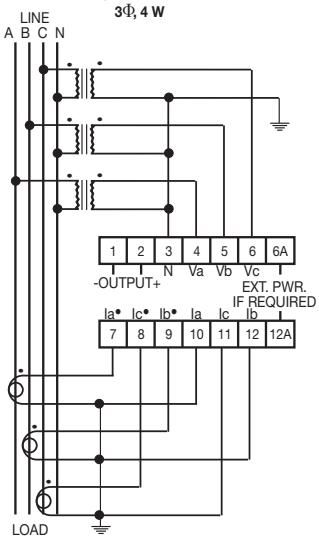

TYPICAL CT/PT CONNECTION
APPLICABLE TO ALL MODELS

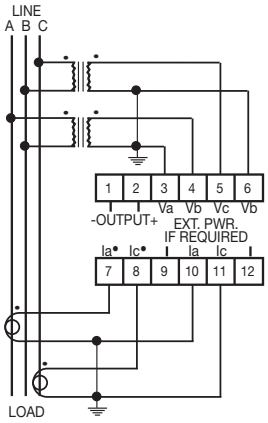

TYPICAL ALL DIRECT CONNECT
APPLICABLE TO ALL MODELS

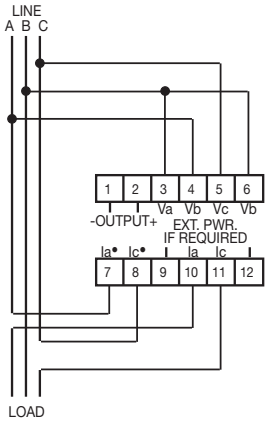

Attention:

If the transducer is mounted on a non-metallic or ungrounded surface the installer must provide the means for grounding and bonding as per NEC (National Electric Code) requirements.

AC Power Transducers (Combined W/R/Q)

Metal Surface Mount Cases

1 ELEMENT
1Φ, 2 W

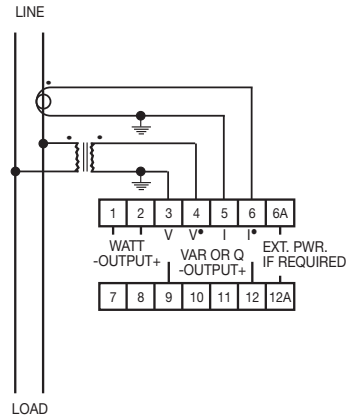

1 ELEMENT
1Φ, 3 W

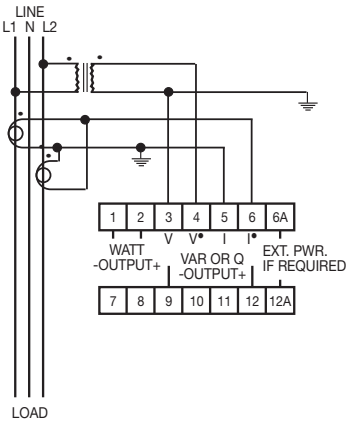

1½ ELEMENT
1Φ, 3 W

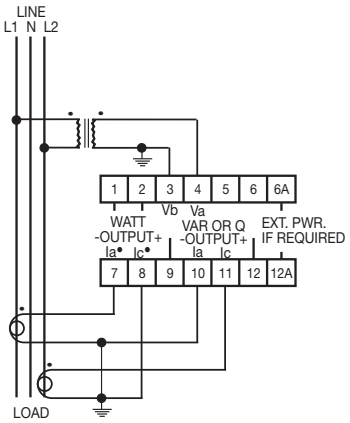

1½ ELEMENT
3Φ, 3 W

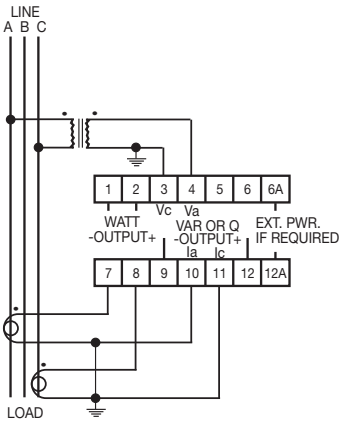

2 ELEMENT
3Φ, 3 W

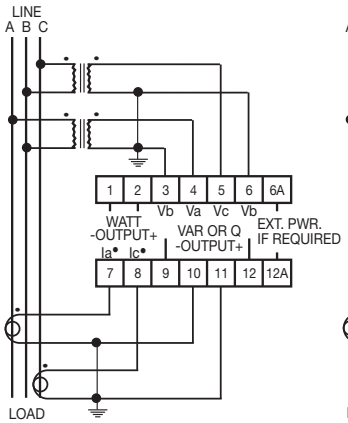

2½ ELEMENT
3Φ, 3 W

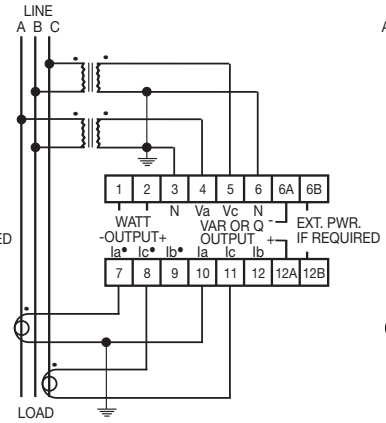

2½ ELEMENT
3Φ, 4 W

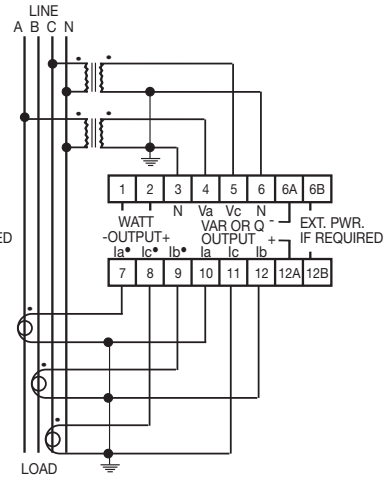

3 ELEMENT
3Φ, 4 W

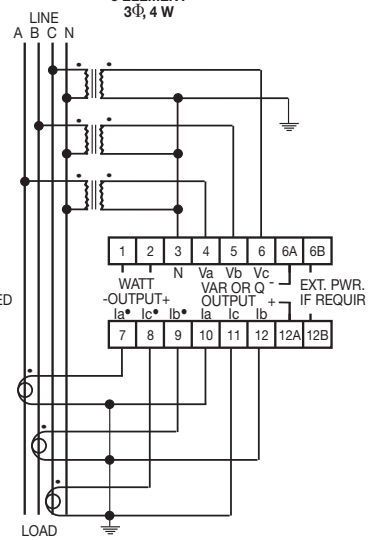

TYPICAL CT/PT CONNECTION
APPLICABLE TO ALL MODELS

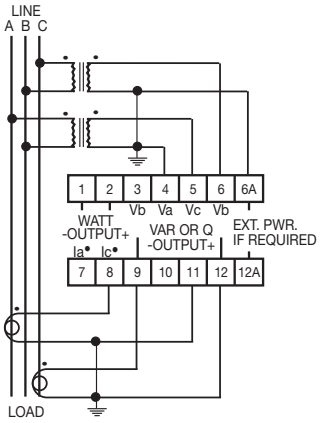

TYPICAL ALL DIRECT CONNECT
APPLICABLE TO ALL MODELS

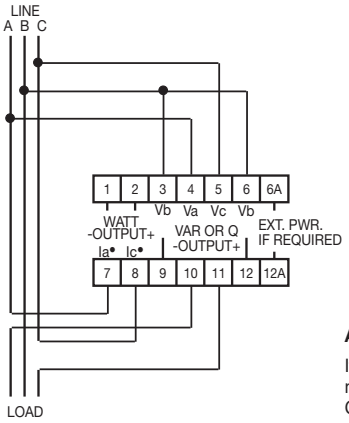

Attention:

If the transducer is mounted on a non-metallic or ungrounded surface the installer must provide the means for grounding and bonding as per NEC (National Electric Code) requirements.

AC Energy Transducers (Single Output)

Metal Surface Mount Cases

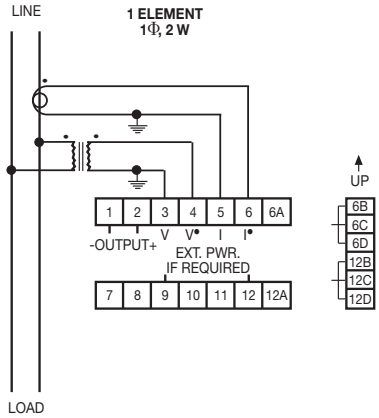

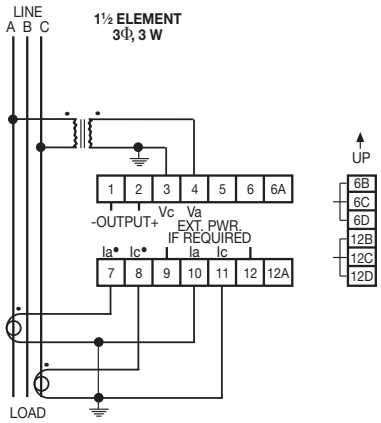

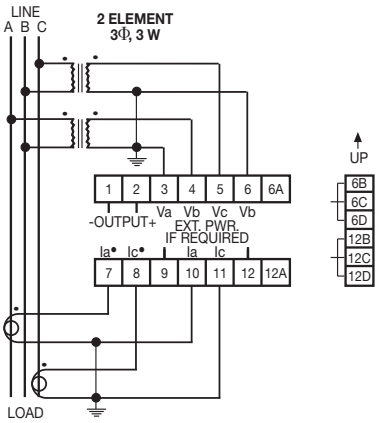

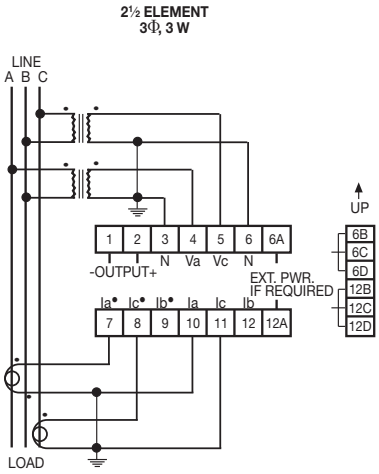

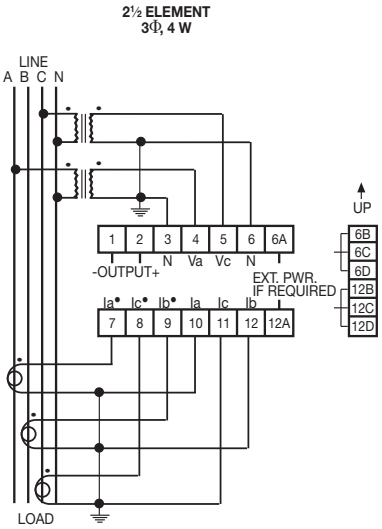

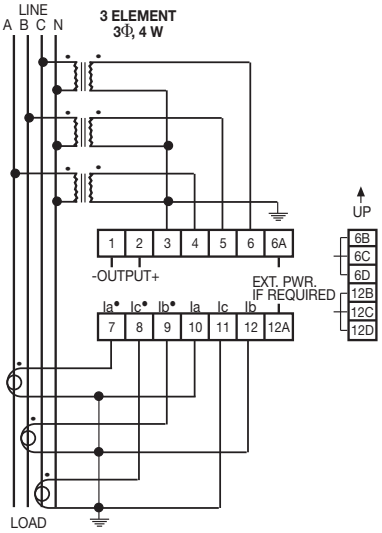

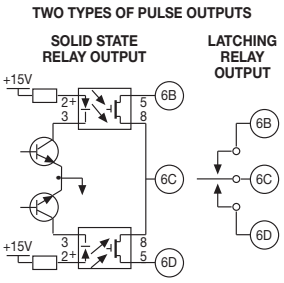

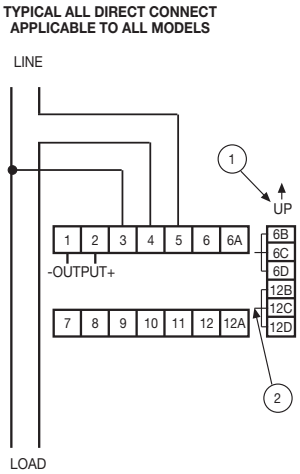

Notes:

① The arrow shows the direction of the mercury wetted relay output.

② The reverse direction is used only for bi-directional pulse outputs.

For supply connections use No. 14 AWG or larger wires rated for at least 75°C (167°F). Use copper conductors only.

Attention:

If the transducer is mounted on a non-metallic or ungrounded surface the installer must provide the means for grounding and bonding as per NEC (National Electric Code) requirements.

AC Energy Transducers (Combined W/R/Q)

Metal Surface Mount Cases

1 ELEMENT
1Φ, 2 W

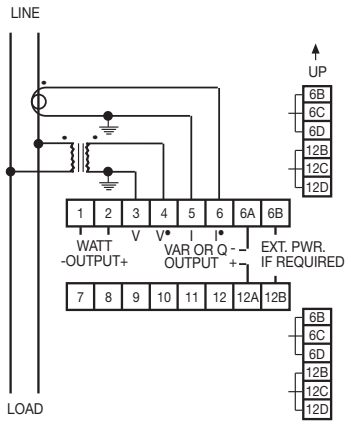

1½ ELEMENT
3Φ, 3 W

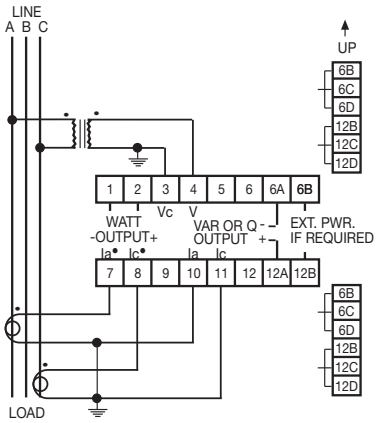

2 ELEMENT
3Φ, 3 W

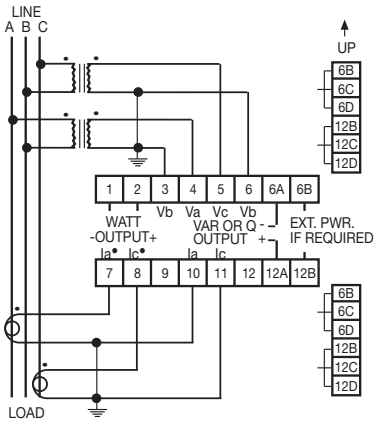

2½ ELEMENT
3Φ, 3 W

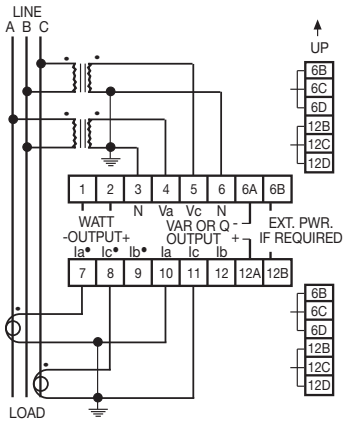

2½ ELEMENT
3Φ, 4 W

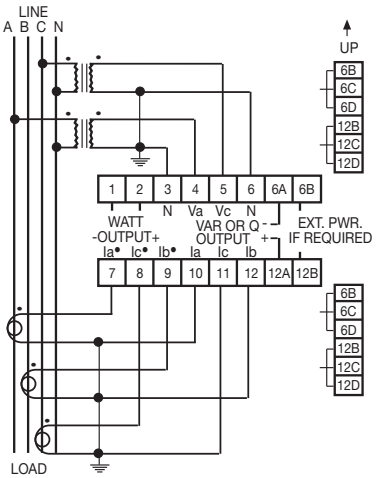

3 ELEMENT
3Φ, 4 W

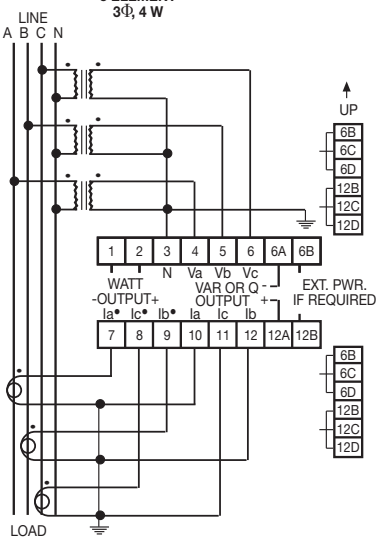

TWO TYPES OF PULSE OUTPUTS

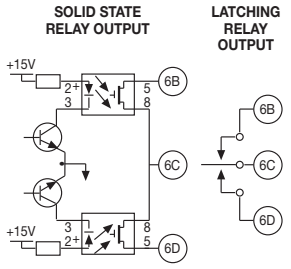

TYPICAL ALL DIRECT CONNECT APPLICABLE TO ALL MODELS

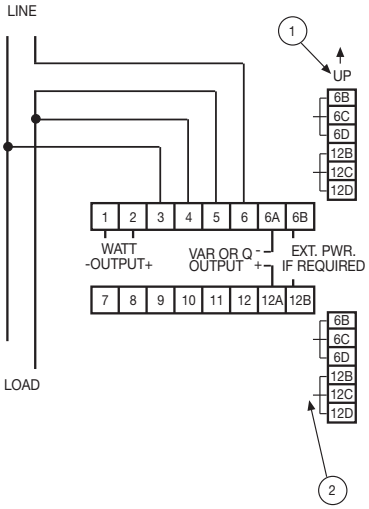

Notes:

① The arrow shows the direction of the mercury wetted relay output.

② The reverse direction is used only for bi-directional pulse outputs.

For supply connections use No. 14 AWG or larger wires rated for at least 75°C (167°F). Use copper conductors only.

Attention:

If the transducer is mounted on a non-metallic or ungrounded surface the installer must provide the means for grounding and bonding as per NEC (National Electric Code) requirements.

Power Factor/Phase Angle Transducers

DIN Rail Mount Cases

POWER FACTOR
CT/PT CONNECTION
SINGLE PHASE
OR
THREE PHASE 4 WIRE

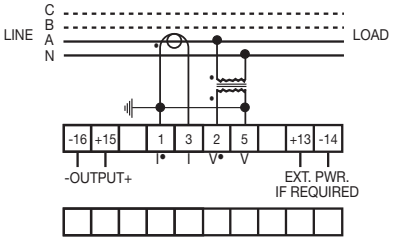

POWER FACTOR
CT/PT CONNECTION
THREE PHASE 3 WIRE

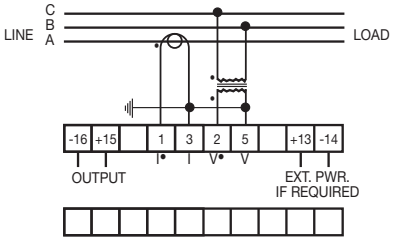

PHASE ANGLE
CT/PT CONNECTION
SINGLE PHASE
OR
THREE PHASE 4 WIRE

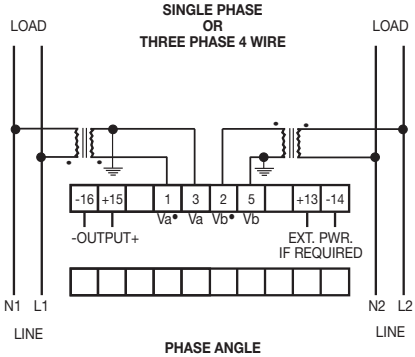

POWER FACTOR
DIRECT CONNECTION
SINGLE PHASE
OR
THREE PHASE 4 WIRE

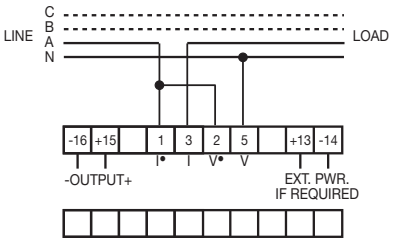

POWER FACTOR
DIRECT CONNECTION
THREE PHASE 3 WIRE

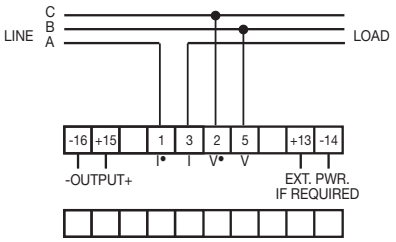

PHASE ANGLE
DIRECT CONNECTION
SINGLE PHASE
OR
THREE PHASE 4 WIRE

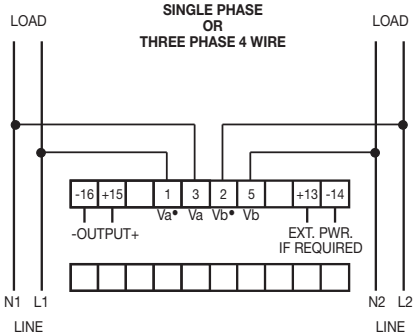

Metal Surface Mount Cases

PHASE ANGLE
CT/PT CONNECTION
SINGLE PHASE OR
THREE PHASE 4 WIRE

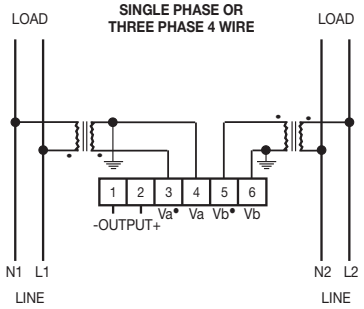

PHASE ANGLE
DIRECT CONNECTION
SINGLE PHASE OR
THREE PHASE 3 OR 4 WIRE

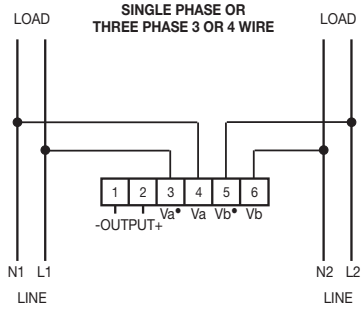

POWER FACTOR
CT/PT CONNECTION
THREE PHASE 3 WIRE

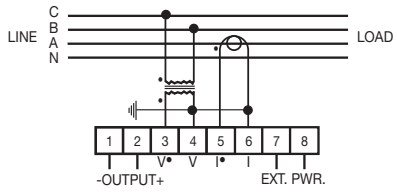

POWER FACTOR
CT/PT CONNECTION
SINGLE PHASE OR
THREE PHASE 4 WIRE

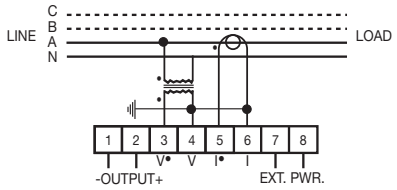

POWER FACTOR
DIRECT CONNECTION
THREE PHASE 3 WIRE

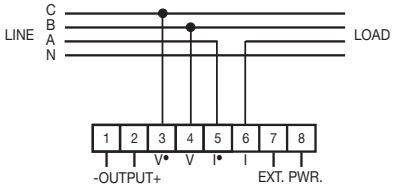

POWER FACTOR
DIRECT CONNECTION
SINGLE PHASE OR
THREE PHASE 4 WIRE

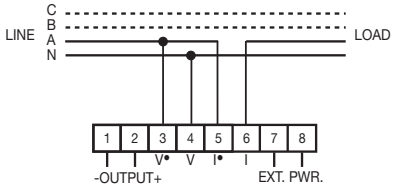

Notes:

1. For supply connections use No. 14 AWG or larger wires rated for at least 75°C (167°F). Use copper conductors only.
2. Power factor transducers do not understand physics and do not know that power factor cannot exceed 90 degrees.
3. If reading appears to be out of range, reverse current or potential leads to suit.
4. Direct connect transducers are available to 600 VAC and/or 25 A(ac).
5. Phases can be rotated on three phase units.
6. It is good practice to use ring lugs on current circuits.
7. It is good practice to connect one side of the PT and CT to earth ground.

Attention:

If the transducer is mounted on a non-metallic or ungrounded surface the installer must provide the means for grounding and bonding as per NEC (National Electric Code) requirements.

Connections

Frequency Transducers

DIN Rail Mount Cases

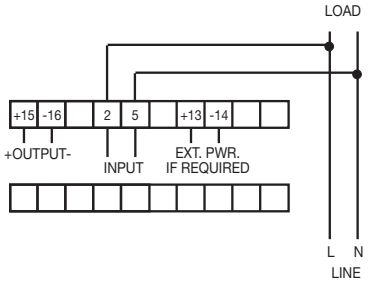

Metal Surface Mount Cases

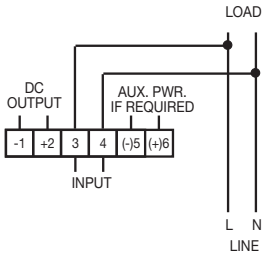

RTD/Slidewire Transducers

DIN Rail Mount Cases

SLIDEWIRE TRANSDUCER

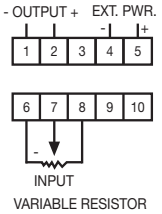

RTD TRANSDUCER

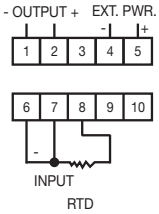

Metal Surface Mount Cases

SLIDEWIRE TRANSDUCER

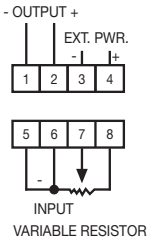

RTD TRANSDUCER

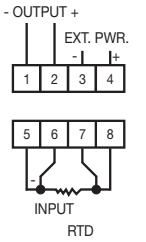

DC Voltage Transducers/Ground Fault Detectors

DIN Rail Mount Cases

DC CURRENT/VOLTAGE TRANSDUCER

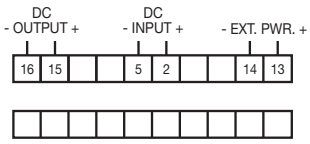

Metal Surface Mount Cases

DC VOLTAGE TRANSDUCER

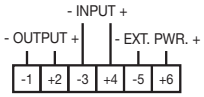

DC VOLTAGE TRANSDUCER AND GROUND FAULT DETECTOR

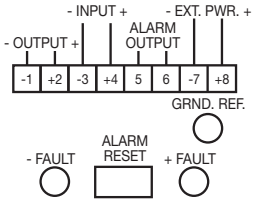

Notes:

1. For supply connections use No. 14 AWG or larger wires rated for at least 75°C (167°F). Use copper conductors only.

Attention:

If the transducer is mounted on a non-metallic or ungrounded surface the installer must provide the means for grounding and bonding as per NEC (National Electric Code) requirements.

Line Post Sensor Transducers/Fault Alarms

Metal Surface Mount Cases

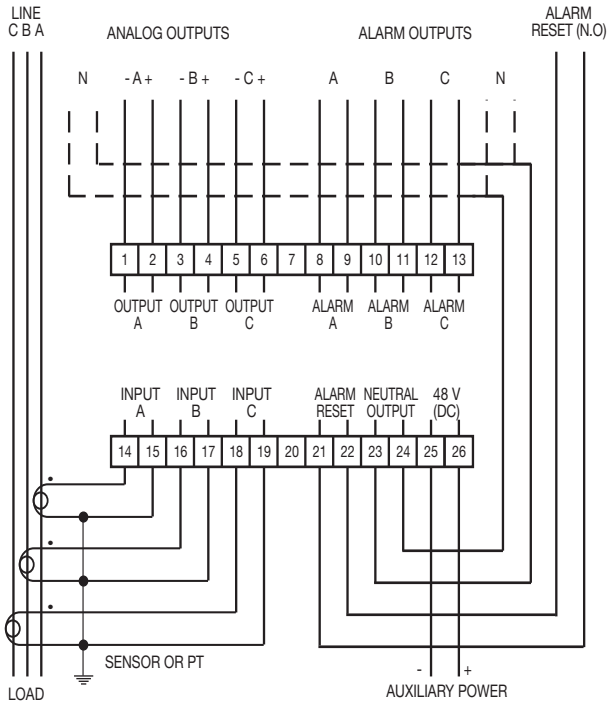

Notes:

1. All transducers need an auxiliary power source.
2. Not all connections are available on all models. Unused terminals are left unconnected internally.
3. The polarity indicated for the alarm reset terminals applies to solid-state switching device.
4. The polarity indicated for the auxiliary power applies to DC sources.
5. The negative terminals of all analog outputs and the alarm reset are common internally.

Attention:

If the transducer is mounted on a non-metallic or ungrounded surface the installer must provide the means for grounding and bonding as per NEC (National Electric Code) requirements.

Line Post Sensor Transducer Systems

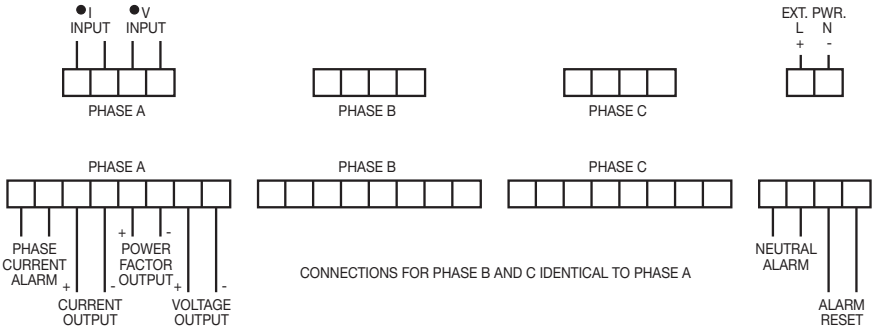

mTech: measurement technologies for the power and process industries.

Instrumentation to precisely measure the critical process signals of industry—from electricity, to temperature, to pressure, to other critical parameters—is diverse, dependable, and readily available from a single source. As a leading manufacturer of power transducers and signal conditioners, mTech can meet a host of your instrument needs:

- **Power transducers in DIN rail mount and metal surface mount configurations.**
- **DIN, metal, and transducer test sets.**
- **Smart power measurement transducers.**
- **Two-wire transmitters (XZ2 series).**
- **Universal four-wire transmitters (XZ7 series).**
- **DIN two-wire transmitters (XZ12 series).**
- **Alarm trip transmitters (XZ14 series).**
- **DIN four-wire transmitters (XZ15 series).**
- **DC V/I transmitters with two or four outputs (DXZ15 series).**
- **Low cost transmitters, head mount, DIN rail; isolators and power supplies (T and DAT series).**
- **Computer configurable DIN four-wire transmitters (Max-Flex series).**
- **Computer configurable octal base plug-in transmitters (Max-Pak series).**
- **I/P transducers.**
- **LED and LCD panel meters.**

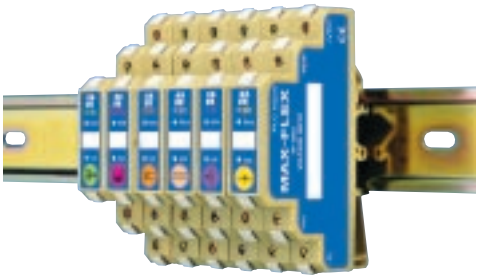

WARRANTY

Measurement Technologies, Ltd. (mTech) warrants this product to be free from all latent defects in material and workmanship under normal use and service. Should this product be found within one (1) year from date of shipment to be defective, mTech will repair such part and return to buyer FOB mTech's plant or will furnish FOB mTech's plant a similar product to replace it, provided written notice of such defect is given to mTech within ten (10) days after discovery of such defect and provided the original part is returned to mTech's plant with transportation charges prepaid.

THE FOREGOING WARRANTIES ARE IN LIEU OF ALL OTHER WARRANTIES, EXPRESSED OR IMPLIED BUT NOT LIMITED TO THE IMPLIED WARRANTIES OF MERCHANTABILITY AND FITNESS FOR A PARTICULAR PURPOSE.

MTECH

techniCAL

eXpanding possibilities